TC8 Test Process

TC8 - ECU and network test

Author & Company	Thomas Kirchmeier (BMW), Georg Janker (Ruetz System Solutions GmbH)
Title	Test Process, TC8 - ECU and network test
Version	1.0
Date	September 22, 2016
Status	Final
Restriction Level	Public

Version Control of Document

Version	Author	Description	Date
0.1	Thomas Kirchmeier / Georg Janker	First Draft merged out of "Requirements of Testhouses" and "General Definitions" documents	15 MAR 2016
0.2	Georg Janker	Update of ECU test and Network Test description	14 APR 2016
0.3	Georg Janker	Review feedbacks merged into the document Chapter 1. Problems with links to figure 1 solved Chapter 2.1 : Added reference to Test specification and following wording: *The new or improved content will be merged into the test specification document (\1\ OPEN Alliance Automotive Ethernet ECU Test Specification) which will be afterwards officially reviewed by all technical members released as a new version.* *To add the word "questionnaire" to clarify and avoid misunderstandings: "The DUT information questionnaire will be provided by the test lab and filled out by the manufacturer."* Added in chapter 3.1.1: • *Records of calibration and maintenance of the test equipment.* • *Records of qualification of the personnel involved in testing.* • *Procedures to handle the samples of the DUT keeping confidentiality and security.* • *Records of the samples used and their evolution.* Chapter 3.2.2.4 erased. Renumbering of chapters and indexes	16 SEP 2016
1.0	Thomas Kirchmeier	Finalization	22 SEP 2016

Restriction level history of Document

Version	Restriction Level	Description	Date
0.1	Confidential to OPEN members		15 MAR 2016
0.2	Confidential to OPEN members		14 APR 2016
0.3	Confidential to OPEN members		16 SEP 2016
1.0	Public		22 SEP 2016

Contents

1 Motivation

This document describes all necessary requirements for implementation of a test process which specifies and performs OPEN Alliance test cases for ECUs (OPEN Alliance Automotive Ethernet ECU Test Specification). These requirements shall be fulfilled by all parties in order to enable not only with high quality test definition but also reliable test results to ensure a stable communication in Automotive Ethernet networks.

The ECU Test Specification pursues the objective to confirm that the ECU will fulfill all requirements of an Automotive Ethernet device. This specification is defined and will be maintained by TC8 of the OPEN Alliance. Based on the test specification a test house implements and verifies these tests in order to offer a test service for any TIER1. The TIER1 is mandated by an OEM to develop a number of ECUs. Usually, the OEM mandates different TIER1 with the development of all ECUs needed for a particular automobile. The TIER1 mandates a Test House to perform the Automotive Ethernet ECU tests. The Ethernet ECU test report from the Test House is forwarded to the OEM by / via TIER1. The OEM performs the network integration for all ECUs based on the test reports of all TIER1. If all Ethernet ECU test reports are bugless, there will be a reliable communication within the network.

Figure 1 illustrates the described situation.

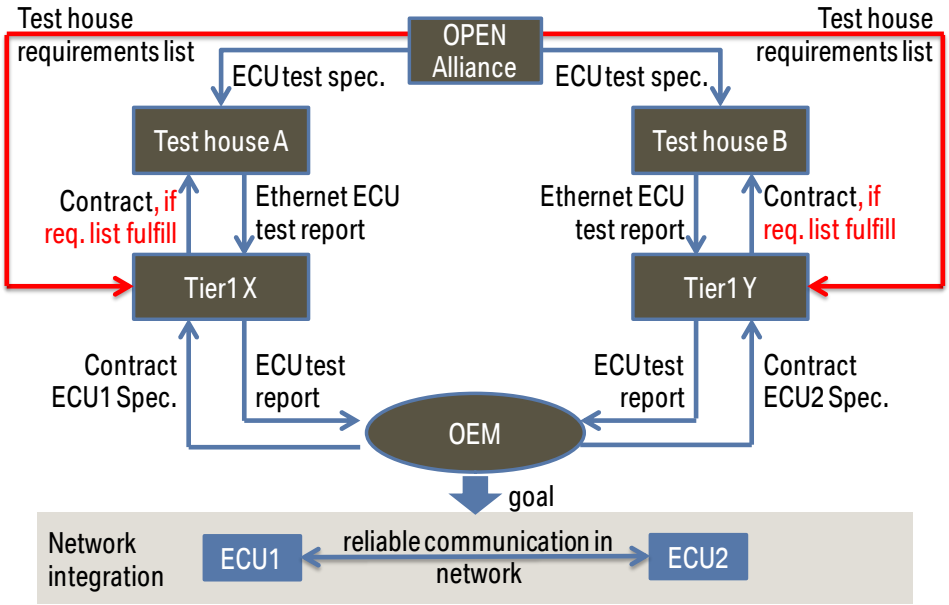

Figure 1: The Goal of the TC8 ECU test specification is the confirmation of a reliable communication of different ECUs in the same network.

In order to ensure this reliable communication in Automotive Ethernet networks, two preconditions have to be fulfilled:

1. The Ethernet ECU Test Specification has to be complete and bugless:

   This will be improved automatically by the cooperation of all TC8 members (OEMs, TIER1s and Test Houses) and their experiences. An identified test gap by a single Test House will be reflected to the TC8 which leads to the definition of an additional test case. Also during the implementation and verification of every test case, the Test House will identify description errors in the test specification. As long as the test specification is cyclically improved this precondition is accomplished. Details about Test Specification Maintenance are described in chapter 2 “Test Specification Process”.

2. The Test Houses have to provide knowledge and infrastructure to implement, verify and perform all specified tests.

   It is very important to enable each TIER1 to be certain about the quality of the Test Houses Services. Test Reports provided by the Test Houses have to be reliable so that OEMs can be convinced that the results are valid to keep TIER1s and OEMs away from additional efforts in retesting for themselves.

In order to support the quality check of a Test House by the TIER1 chapter 3 “Requirements on Test Houses” provides some requirements which shall be fulfilled by a Test House (also refer to figure 1, red arrows). These requirements can be seen as a check list for Test Houses.

If everybody meets these statutory requirements, conformance and interoperability can be assured in the most cost efficient way. The TC8 Compliance Standard will enable also compatibility in basic data transportation services even between OEMs. Figure 2 gives an additional overview about the roles of OEMs, Suppliers, Test Houses and the OPEN ALLIANCE TC8 as the Compliance Standardization Committee.

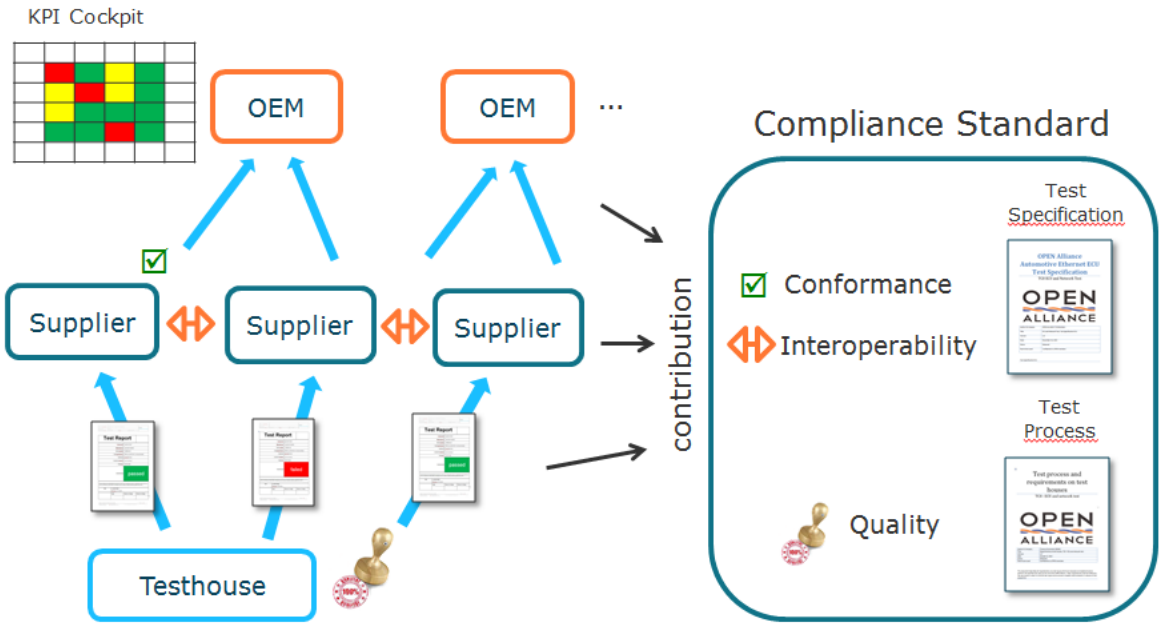

Figure 2: Roles and Relationships in the Compliance Verification Process

2 Test Specification Process

The Collection of Test Cases into the TC8 Test Specification has been organized in a process which is described in this chapter. In general the definition of TC8 Test cases should be driven by common Requirements (e.g. defined by OEMs or in other OPEN specifications). The main task of TC8 is to filter and if necessary modify Test Specification proposals from its members to get a standard solution which satisfies a sufficient test depth for any applicable project.

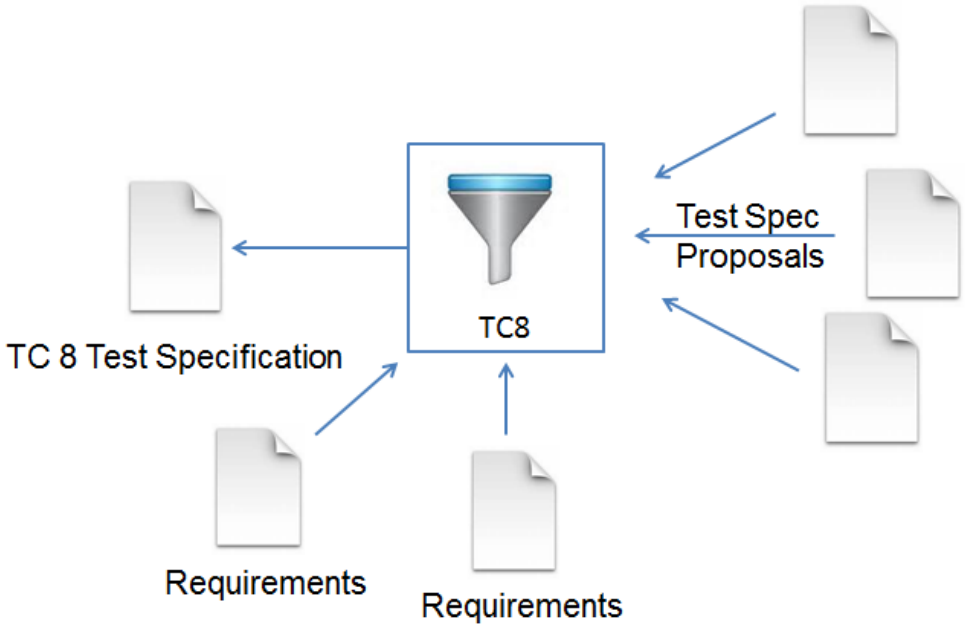

Figure 3: Gaining new content for TC8 Test Specification

2.1 Adding New Scopes

The specification content is clustered in different scopes, such as, Layer 1, Layer 2, TCP/IP or Automotive Protocol test scopes. Members of the TC8 can trigger to introduce a new scope or even a new sub scope. The TC8 chairs conduct the discussions within TC8 and if necessary with the OPEN ALLIANCE steering committee to decide if the new scope will be added or not.

The new or improved content will be merged into the test specification document (\1\ OPEN Alliance Automotive Ethernet ECU Test Specification) which will be afterwards officially reviewed by all technical members released as a new version.

When a new scope has been opened, the following process will start:

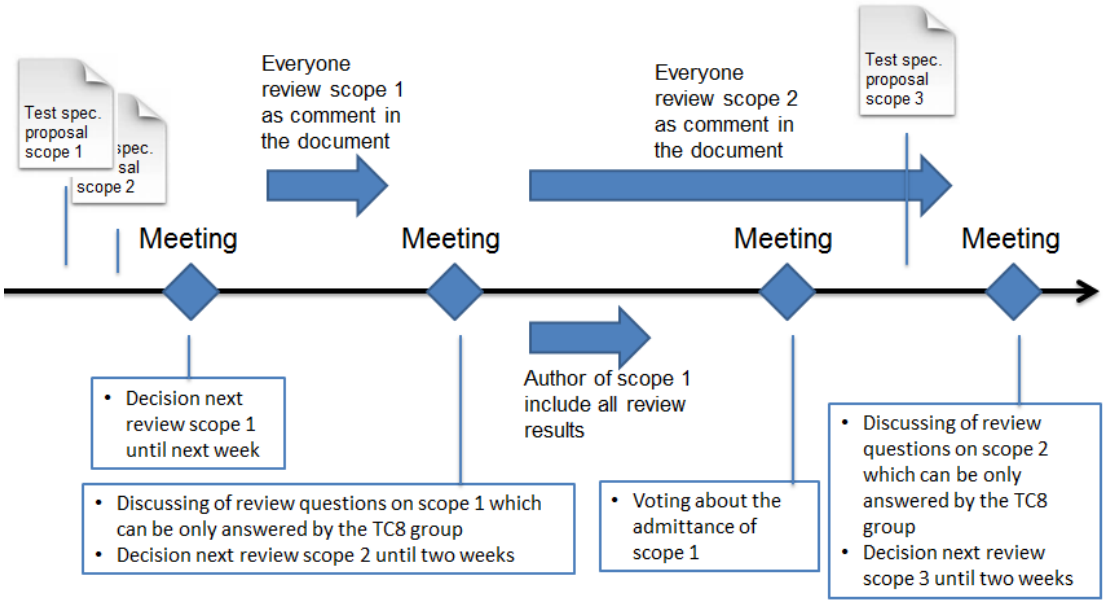

Figure 4: Adding new scopes to the TC8 specification

In the first meeting, the decision is announced that a new scope will be opened (not shown in the picture). After collecting every proposal a review phase will be announced. Every TC8 member is encouraged to give feedback to the authors of the proposals. The authors try to update their proposals due to the inputs. When this task has been finished, the next TC8 meeting performs a voting about admittance of the proposals. If the vote succeeds, the current TC8 test specification draft will be updated afterwards.

2.2 Release of TC8 Test Specification

The TC8 Test Specification is intended to be public after release. Therefore it is important to give all Technical Members of the OPEN ALLIANCE (not only the TC8 members) a chance to review the current draft. This review phase follows the general rules of OPEN ALLIANCE for releases of specifications.

The goal of TC8 is to perform at least 1 release per year.

2.3 Maintenance

Released tests shall be able to be improved due to the ongoing experience of the test process or to new upcoming requirements. Therefore the current TC8 specification can be updated within a maintenance process. This process shall be handled in the same way like described in 2.1 “Adding New Scopes”.

Any member of the TC8 can trigger a maintenance task for a test scope by providing a proposal. The TC8 chairs plan when to start the review phase.

2.4 Test Process

As mentioned in the introduction, it is very important not only to define test cases, but also to clarify how to perform the test execution. This chapter describes the Test Process as it is performed when a TIER1 addresses a Test House to get a Compliance Test.

2.5 Compliance and System Integration

First of all, it is important to state that testing should not only be performed at the very end of development of an ECU but at the earliest time as possible when new features have been introduced into the ECU during system integration. Right before start of production there should be regression test of all features. Figure 5 describes the timeline of the test execution.

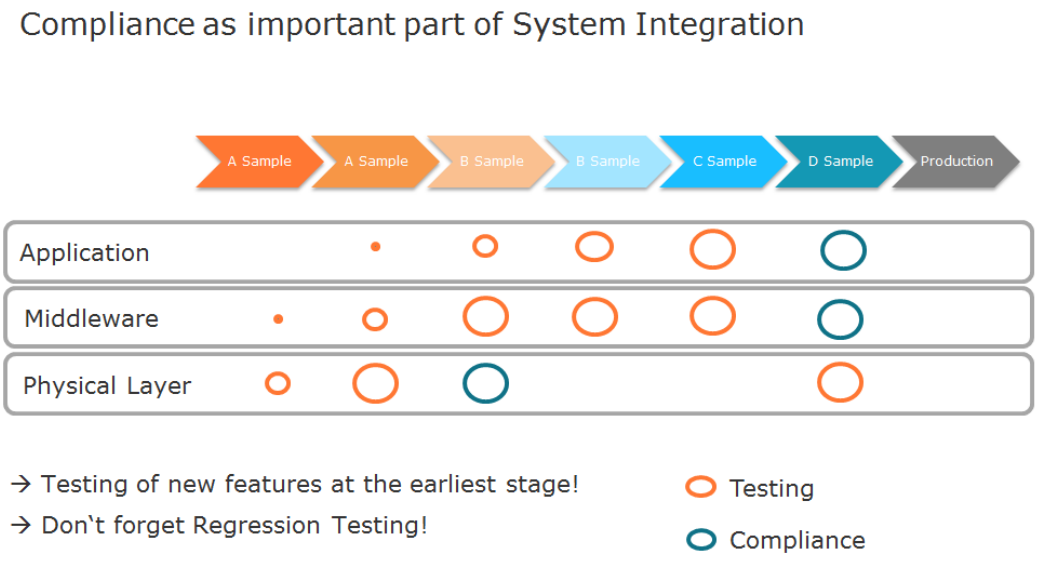

Figure 5: Compliance as important part of System Integration

2.6 Test Execution at a Test House

For every test cycle TIER1 the Test House shall execute following tasks as described in Figure 6.

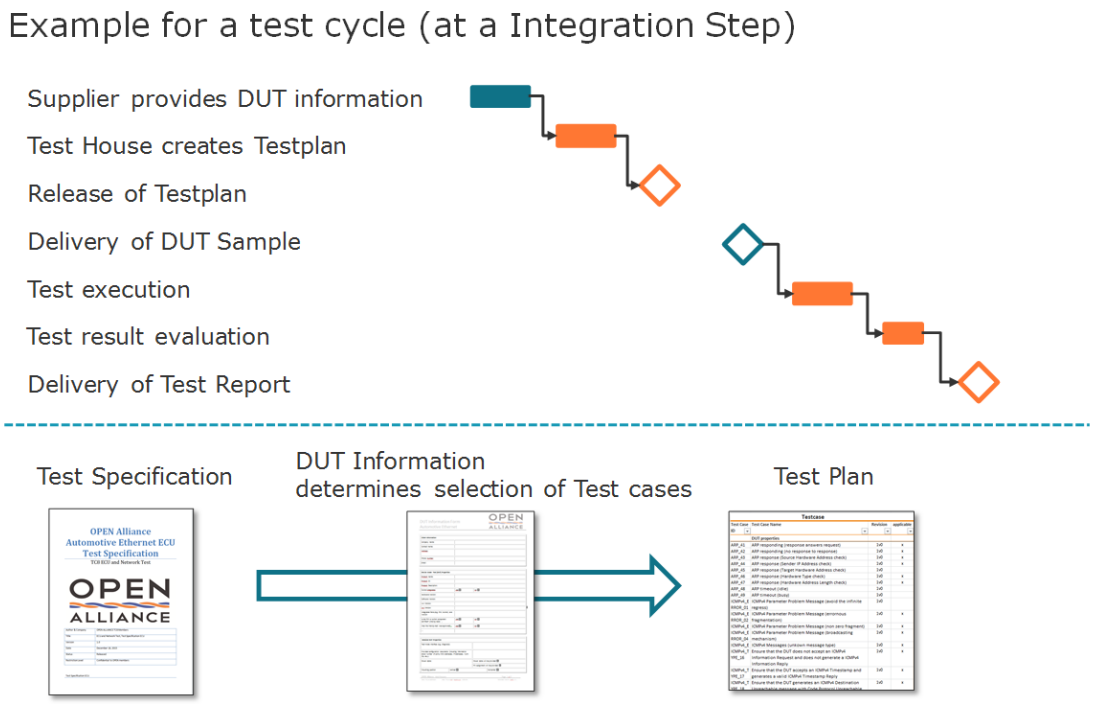

Figure 6: Example for a test cycle

Please note that every ECU has its own properties. These properties have to be stated in a questionnaire (so called “DUT information”) about currently implemented features. The DUT information questionnaire will be provided by the test lab and filled out by the manufacturer.

Out of that information the Test House is able to create a test plan that informs the manufacturer about the selected tests. When the device under test (DUT) has been delivered to the test lab, test execution starts. After test execution and result evaluation, the test cycle ends by sending a test report to the manufacturer.

3 Requirements on Test Houses

To ensure that the results of the test process are reliable the Test Houses have to ensure that several requirements are fulfilled.

3.1 Organizational Requirements

3.1.1 Test House must be ISO 17025 accredited

The Test House's responsibility is to carry out testing according to ISO 17025 including:

- Validation of test methods
- Procedure to estimate uncertainty for a testing laboratory – all components
- Traceability by unbroken chain to relevant primary standards of SI units – calibration certificates stating measurement results, including uncertainty and/or a statement of compliance with a metrological specification
- Records of original observations, derived data and sufficient information to establish and audit trail – copy of reports/certificates- identification of factors affecting the uncertainty – identity of personnel
- Records saved for 10 years
- Records of calibration and maintenance of the test equipment.
- Records of qualification of the personnel involved in testing.
- Procedures to handle the samples of the DUT keeping confidentiality and security.
- Records of the samples used and their evolution.

3.1.2 Test House must be neutral

Policies and procedures to avoid the involvement in activities that would diminish confidence in the laboratory's competence, impartiality, independence:

- Independent from OEM
- Independent from supplier chain
- Economically independent from internal and external conditions

3.1.3 Test House must have relevant technical experience

- Automotive background (company experience 5 years)
- Experience in product evaluation and testing (company experience 5 years)
- Experiences with product certification (company experience 5 years)
- Intensive experience with Automotive Ethernet on layer 1
- Intensive experience with Ethernet above layer 1
- Experience in testing of system integration in Automotive
- Demonstrate knowledge on Automotive Ethernet Technology
- Demonstrate comprehensive understanding on Ethernet Specifications

3.1.4 Test House Personnel

- At least 3 experts with at least 3 years of Automotive Ethernet / Ethernet experience each
- Ensuring of competence of testing personnel, of personnel who operate specific equipment, evaluate results or sign reports
- Policy and procedures for identifying training needs and providing training. Training effectiveness is evaluated
- Personnel competent, supervised and working in accordance with the quality system

3.1.5 Membership and Cooperation

- Technical member of OPEN Alliance
- Active member of TC8 and the following up organization

3.2 Technical Requirements

3.2.1 Test House has to validate test cases with a reference system

For the validation of each test case, the Test House needs to have a reference system or a Golden Device. Reference systems are required for hardware and also for software tests. Such a reference system can be developed and maintained by the Test House itself or can be bought from another company (**Error! Reference source not found.**).

3.2.2 Improvement of the reference systems

3.2.2.1 General requirement

At least one of the following activities has to be achieved by the Test House to improve their testing quality. A test case can only be as good as the reference system.

3.2.2.2 Exchange of reference systems between Test Houses (Plug-Fest)

In order to identify errors on the reference system an exchange of the reference system between two or more Test Houses leads to a different view on the own test setup. Different testing results of an exchanged reference system show test case implementation bugs as well as errors in the own reference system. Further, such an exchange will help to improve the understanding of the test specifications and identify test gaps. Finally, these findings lead to discussions in the TC8 and also to an improvement of the test specifications.

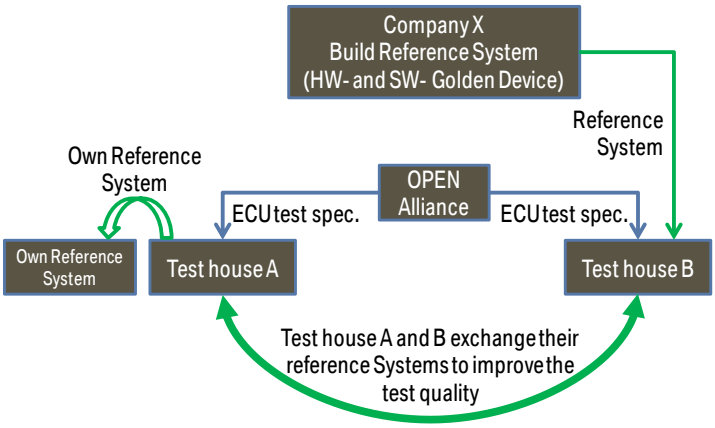

Figure 7: Plugfest

3.2.2.3 Use of a second Test House to verify the results

Test Houses should exchange their DUTs in certain intervals among themselves in order to verify and compare their own test results. Different testing results show test case implementation bugs or a different understanding of the test specification. This will help to improve the understanding of the test specifications and identify test gaps. Finally, these findings lead to discussions in the TC8 and also to an improvement of the test specifications.

Precondition: The passing of an ECU/DUT to another Test House must be accepted by the TIER1.

4 Appendix

4.1 Referenced Documents

\1\ OPEN Alliance Automotive Ethernet ECU Test Specification (OPEN Alliance TC8 Members)

4.2 Schematic Overview

The following pictures are only for explanation purposes.

No intention of completeness regarding internal structure of an ECU for example.

ECU

Figure 8 describes the meaning of the terms “Module”, “Component” and “Part”

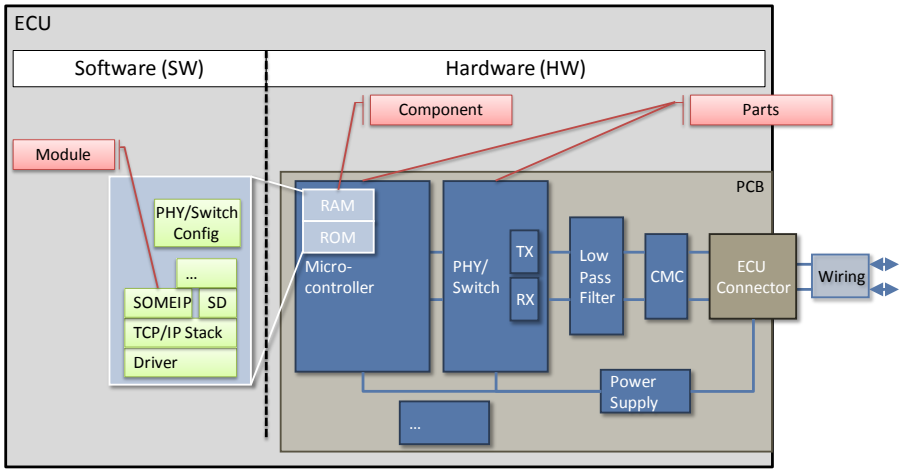

Figure 8: ECU

Network

Figure 9 shows the components of an Automotive Ethernet Network

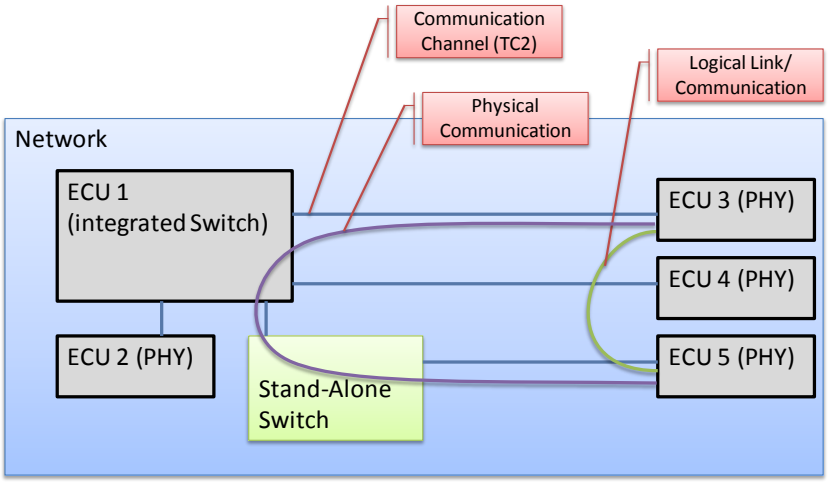

Figure 9: Network

4.3 ECU Test

4.3.1 Definition of ECU Test

An ECU test can be performed without involving other ECUs from the planned network.

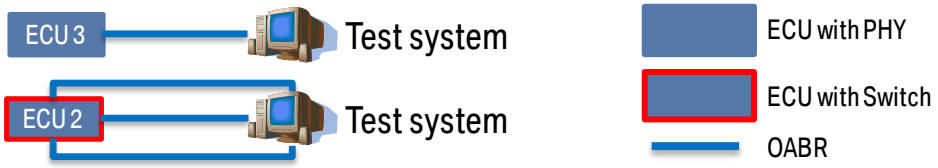

Figure 10: ECU Test setup

4.3.2 Example of ECU Test: Switch configuration

The configuration of an ECU with switch can be tested as ECU test,
e.g. VLAN configuration check as given by the OEM

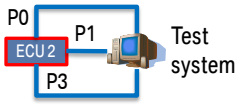

Port	VLAN Membership
P0	0x49, 0x59
P1	0x59
P2	0x49

Tx VLAN P0	Receive msg on Port	
0x01	-	-
…	-	-
0x49	P2	-
…	-	-
0x59	-	P1
…	-	P2

Figure 11: ECU Test example

4.4 Network Test

4.4.1 Definition of Network Test

Precondition1: All ECUs need to have successfully executed ECU test in order to be able to perform network tests.

Precondition2: All ECUs applications need to be running before the network tests can be performed. A network test can only be performed when all ECUs are able to execute its relevant tasks.

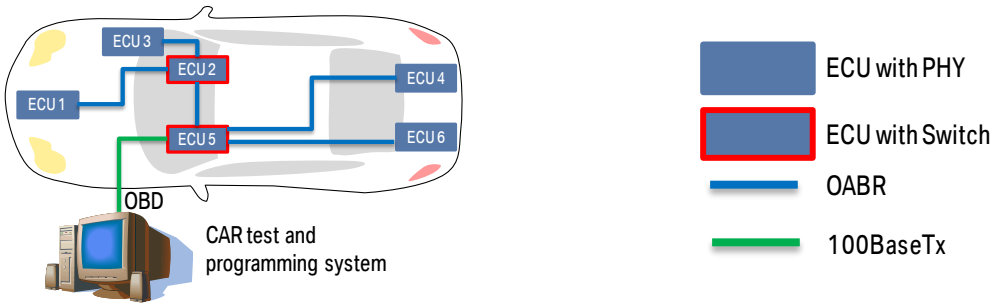

Figure 12: Network test setup

4.4.2 Example of Network Test: Additional communication load

- Different ECUs (1 and 6) are connected to cameras
- ECU3 makes a fusion of all pictures

Stress test: An additional communication load (e.g. ARP-Burst with 10 Mbit/s) leads to a higher processor load for ECU3 in the Network test as in the ECU test

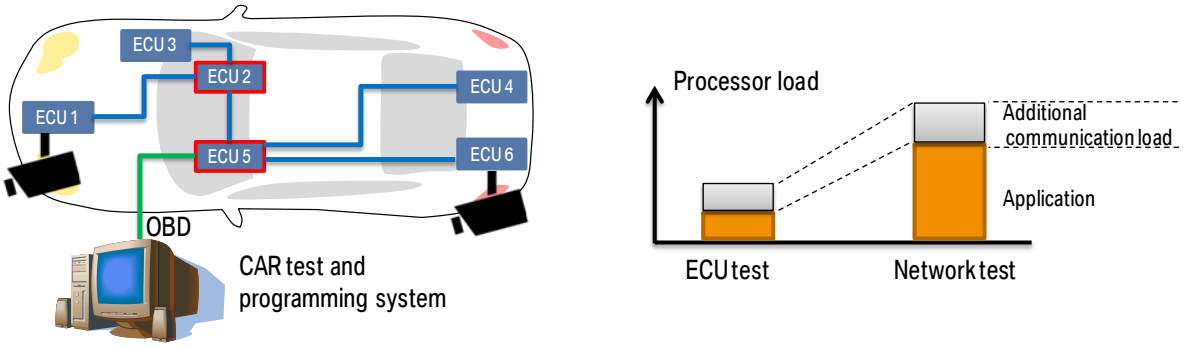

Figure 13: Network Test Example

4.5 Glossary

Component

Component is a hardware item that cannot be verified by itself, but must be verified within a Part. A Component can be one or more ICs (integrated circuits). RAMs or ROMs are examples of Components as they can only be verified together with the Microcontroller to which they are connected.

Part

Lowest level hardware item that can be functionally verified using test software. A Part may require the presence of related Components to allow testing (for example, a Microcontroller may be tested without the memory). A PHY, Switch, or Microcontroller is an example of a Part.

Switch

Switch is a Part that is used as interconnection to handle the communication between different Network Segments.

Network Segment

Network Segment is a portion of a Network. It is an electrical connection between networked ECUs.

PHY

PHY is a Part that connects the MAC, typically implemented in a microcontroller, to the physical transmission medium. The PHY provides a Media Independent Interface (MII) to the Part Reconciliation sublayer of the MAC and a Medium Dependent Interface (MDI) to the physical medium.

Typically a PHY Part implements the Physical coding sublayer (PCS) for frame encoding and decoding, the Physical Medium Attachment (PMA) for serialization and deserialization and the Physical Medium Dependent (PMD) layer which is responsible for interfacing to the transmission medium.

Module

Module is a software product within the bounds of Scope designed and marketed for the enabling of a complete ECU, yet not being able to function as a complete ECU. A Module is only licensed for integration into an ECU that is subsequently verified for compliance.
Modules are units such as TCP/IP stack or Driver.

ECU

ECU is a complete combination of hardware, software as well as of functionality and communication behavior. Any product within the bounds of Scope that is offered for sale or is distributed in an unmodified form to any vehicle manufacturer who acquires the product for such vehicle manufacturer's commercial use in combination with any other product.

Network

Network allows networked devices to exchange data along data connections. The data connections are established using cable media or wireless media.

System Integrator
System Integrator is a vehicle manufacturer that realizes a Network and markets it. The System Integrator takes responsibility for the functionality, interoperability and overall quality of the whole Network product.

TC8
The OPEN Alliance Technical Committee is responsible for managing, reviewing and improving the Compliance Verification Process.

Compliance Verification Process
The process defined for verification of compliance.

Standard
Standard is an established norm in regard to technical systems. It is a formal document that establishes uniform engineering or technical criteria, methods, processes and practices.

Specification
All Specifications published by OPEN Alliance as official Specifications. All other relevant specifications (e.g. ISO) have to be referenced in the Specifications or Test Specifications.

Compliance Requirement
A document that specifies the requirements that must be met and the process that must be executed by products for purposes of demonstrating that such products comply with the Specifications.

Test Specification
A document describing the test sequences that have to be performed and the expected test results. An ECU or a Network seeking Compliance Verification has to pass these test cases.

Test Case
A uniquely identifiable compliance test, as defined in the Test Specifications, by which the manufacturer demonstrates compliance to a particular aspect of the Specifications or interoperability with another OPEN Alliance product.

Scope
The protocols and data formats needed for Interoperability and signaling characteristics solely to the extent disclosed with particularity in the Specifications where the sole purpose of such disclosure is to enable products to interoperate, interconnect or communicate as defined within the Specifications. For clarification, the Scope shall not include

1. any enabling technologies that may be necessary to make or use any product or portion thereof that complies with the Specifications, but are not themselves expressly set forth in the Specifications (e.g., semiconductor manufacturing technology, compiler technology, object oriented technology, basic operating system technology, etc.); or
2. the implementation of other published specifications developed elsewhere but referred to in the body of the Specifications; or

3. any portions of any product and any combinations thereof the purpose or function of which is not required for compliance with the Specifications.

Compliance Testing
Testing according to the applicable procedures given in the Test Specifications.

Test Method
Technical procedure to determine if the behavior of products is in line with the standards and guidelines. The test procedures are described in Test Specifications and in test cases. The test is performed as Prototype Test.
There are two types of Test Methods: products are tested for Conformance and for Interoperability.

Test
Test is the collection of all Test Cases applicable for a specific ECU or Network. Test is usually performed on a prototype of a product. The prototype shall be fully equivalent with the standard or series product. The prototype has to be the complete combination of hardware, software as well as of functionality and communication behavior.

Conformance Test
Conformance Test refers to the testing of a product for the presence of certain properties required in the Specifications, relevant standards and Test Specifications. The Conformance Test examines properties that are mandatory for the use of the product and properties that are optional. A test of other characteristics not described in the standards or Test Specifications, such as internal interfaces, reliability are not carried out within the framework of the Conformance Tests.

Interoperability Test
Interoperability Test refers to the test of a product against a set of other products in a heterogeneous product environment.
Note: The more products are tested against each other, the higher the achieved degree of interoperability.
A product is interoperable if it fulfills the properties required in the Interoperability Test specification during operation in an existing Test System comprising products and does not lead to an unacceptable influence on the overall system functions.

Test System
Test System is a set of interacting hardware and software with the aim of execution of tests.

Compliance Test House
A Test House recognized by OPEN Alliance for the purpose of testing ECUs and Networks for compliance with the Specifications and responsible for checking declarations and documents against requirements and applying for declaration for compliance.

Golden Implementation
Golden Implementation is reference software on a Golden Device. A Golden Implementation is for the validation of a Test House and for interlaboratory comparisons.

Golden Device
Golden Device is a specific hardware (e.g. PCB, ECU or a Network). A Golden Device is for the validation of a Test House and for interlaboratory comparisons.

Assessment Date
The date on which the Compliance Test House, having assessed the product, determines that it complies with the current Automotive Ethernet & Protocols Compliance Requirements.

Declaration of Compliance (DoC)
A written statement of the Supplier and the Compliance Test House declaring compliance of a tested product with the Specifications.

Test Report
A document documenting the test results and other information relevant to compliance test. Compliance Test House on completion of an appropriate test issues the test report. The test report contains unequivocal statements about the success or otherwise of the test.
The Compliance Test House notes in the test report whether or not the technical preconditions are fulfilled for a DoC to be issued for the tested OPEN Alliance product.

Compliance File
The set of evidence demonstrating a product's compliance to the Specifications consists of the DoC, test reports, additional technical documentation and declarations.

ECU Feature Information
Table giving end user information about the levels of compliance of an ECU.

Compliant Functionality
Only those specific portions of products (hardware, software or combinations thereof) that:

1. implement and are compliant with the actual Specifications,
2. have been verified pursuant to the Compliance Verification Process,
3. are within the bounds of the Scope and
4. meet the requirements set forth in the Compliance Requirements.

Compliant Product
A product that has successfully completed the Compliance Verification.

Validation
The assurance that a product or system meets the needs of the customer and other identified stakeholders.

Verification
The evaluation of whether or not a product or system complies with a requirement or specification.