Channel and Components Requirements for 1000BASE-T1 Link Segment Type A

Version 2.3

Author & Company	See Contributing Members on Page 2
Title	Channel and Components Requirements for 1000BASE-T1 Link Segment Type A (UTP)
Version	2.3
Date	12 January 2021
Status	Final
Restriction Level	Public

This document contains electrical requirements and measurement specifications on 1000BASE-T1 channel and components link segment type A (UTP). It shall be used as a standardized common scale for the evaluation of the RF properties for physical layer communication channels to enable 1000BASE-T1 technology.

Version Control of Document

Version	Author	Description	Date
2.0	Contributing Members	First public version	2018-01-12
2.1	Contributing Members	Maintenance update	2020-10-22
2.2	Contributing Members	Maintenance update	2020-11-05
2.3	Contributing Members	Maintenance update	2020-11-18

Restriction level history of Document

Version	Restriction Level	Description	Date
2.0	Public	First public version	2018-01-12
2.1	OPEN Alliance TC9	MDI Test Head mode conversion limit in Table 7.2-1 changed	2020-10-22
2.2	OPEN Alliance TC9	Editorial comments solved, TC9 review of v2.1	2020-22-05
2.3	OPEN Alliance Technical Members	TC9 approval for publication, version for All Technical Members review	2020-11-18
	Public	Restriction level changed to “Public”, status changed to “Final”	2021-01-12

CONTRIBUTING MEMBERS

Sasha Babenko (Molex LLC)
Bert Bergner (TE Connectivity Germany GmbH)
Ahmad Chini (Broadcom)
Mike Gardner (Molex LLC)
Prasanth Gowravajhala (HARMAN International)
Dalibor Ignjatovic (Acome)
Matthias Jaenecke (Yazaki Europe Ltd.)
Ali Javed (Molex LLC)
Michael Kaindl (BMW Group)
Bernd Körber (Forschungs- und Transferzentrum e.V. an der Westsächsischen Hochschule Zwickau)
Bryan Moffitt (CommScope)
Thomas Müller (Rosenberger Hochfrequenztechnik GmbH & Co. KG)
Harsh Patel (Molex LLC)
Neven Pischl (Apple Inc.)
Rainer Pöhmerer (LEONI Kabel GmbH)
Michael Rucks (Delphi Deutschland GmbH)
Dr. Matthias Spägele (Daimler AG)
Yves Stricot (DELPHI DCS France)
Daniel Wiesmayer (DRÄXLMAIER Group)
Tom Wunderlich (Forschungs- und Transferzentrum e.V. an der Westsächsischen Hochschule Zwickau)
Sungjong Yoo (Molex LLC)
John A. Yurtin (Delphi Connection Systems)

OPEN Alliance: Public OPEN Specification

Copyright Notice and Disclaimer

Table of Contents

1 Scope 9
2 Channel Definition 10
3 General Definitions and Requirements 12
4 General Setup and Measurement Fixtures 15
4.1 Required Measurement Equipment 15
4.2 Vector Network Analyzer (VNA) Settings 16
4.3 Presentation of Measurement Results 19
4.4 Measurement Fixtures 19
4.4.1 Impedances and Termination 21
4.4.2 Balance 22
4.4.3 Crosstalk 23
5 Measurement Setups 25
5.1 Measurement Setups for Connectors 25
5.1.1 Connector Setups (SCC Parameter) 25
5.1.2 Connector Setups for ES Parameter 29
5.2 Measurement Setups for Cables and Channel 32
5.2.1 Cable and Channel Setups for SCC Parameter 32
5.2.2 Cable and Channel Setups for ES Parameter 36
6 Electrical Requirements 38
6.1 Basic Requirements for Standalone Communication Channel (SCC) 38
6.1.1 Requirements for Connectors (SCC Context) 38
6.1.2 Requirements for Cables (SCC Context) 40
6.1.3 Requirements for Whole Communication Channel (SCC Context) 42
6.2 Additional Requirements for Alien Coupling within Environmental System (ES) 44
6.2.1 Requirements for Connectors (ES Context) 44
6.2.2 Requirements for Cables (ES Context) – Informative 46
6.2.3 Requirements for Whole Communication Channel (ES Context) 46
7 MDI Test Head 48
7.1 General MDI Test Head Description 48
7.2 Characterization of MDI Test Head and Limits 49
Annex A – Additional Measurement Setup Definitions 51
A.1 Example for Measurement Fixtures 51

A.2 Example for Cable Arrangement 53
A.3 Cable Crosstalk Measurement – Informative 54
A.4 Reference Communication Channel 58
A.5 Reference Wiring Harness 59
Annex B – Correction Method for TDR Measurements 62

References

[1] IEEE 802.3bp™-2016, Physical Layer Specification and Management Parameters for 1 Gb/s Operation over a Single Twisted Pair Copper Cable

[2] DIN EN 61935-1, Testing of balanced communication cabling in accordance with ISO/IEC 11801 – Part 1: Installed cabling (IEC 46/217A/CDV: 2007)

[3] ISO554: Standard atmospheres for conditioning and/or testing – Specifications – 1976

[4] DIN EN 50289-1-7:2001 – Communication cables - Specifications for test methods - Part 1-7: Electrical test methods; Velocity of propagation

List of Abbreviations

AACRF	Alien Attenuation to Crosstalk Ratio – Far End
AFEXT	Alien Far End Crosstalk
AFEXTDC	Alien Far End Cross Conversion Loss Common to Differential
AFEXTDS	Alien Far End Cross Conversion Loss Single-ended to Differential
ANEXT	Alien Near End Crosstalk
ANEXTDC	Alien Near End Cross Conversion Loss Common to Differential
ANEXTDS	Alien Near End Cross Conversion Loss Single-ended to Differential
CC	Communication Channel
CIDM	Characteristic Impedance Differential Mode
CM	Common mode
CUT	Cable under Test
DM	Differential mode
DUT	Device under Test
ECU	Electronic Control Unit
EMC	Electromagnetic Compatibility
ES	Environment System
FEXT	Far End Crosstalk
FEXTDC	Far End Cross Conversion Loss Common to Differential
IEEE	Institute of Electrical and Electronics Engineers
IFFT	Inverse Fast Fourier Transformation
IL	Insertion Loss
LCL	Longitudinal Conversion Loss
LCTL	Longitudinal Conversion Transfer Loss
MDI	Media Dependent Interface
OA	OPEN Alliance
OEM	Original Equipment Manufacturer
PCB	Printed Circuit Board
PSAACRF	Power Sum Attenuation to Alien Crosstalk Ratio – Far End
PSAFEXT	Power Sum Alien Far End Crosstalk
PSANEXT	Power Sum Alien Near End Crosstalk
RF	Radio Frequency
RL	Return Loss

RT	Rise Time
S-parameter	Scattering Parameter
SCC	Standalone Communication Channel
TDR	Time Domain Reflectometry
UTP	Unshielded Twisted Pair
VNA	Vector Network Analyzer
WCC	Whole Communication Channel

1 Scope

The intention of this specification is to present the general RF requirements for a physical layer communication channel according to Figure 1-1 to enable 1000BASE-T1 technology using unshielded twisted pair (UTP) cables for Automotive Ethernet applications. These requirements are related to signal integrity and EMC behaviour of the communication channel. The link segment requirements for 1000BASE-T1 according [1] shall be met.

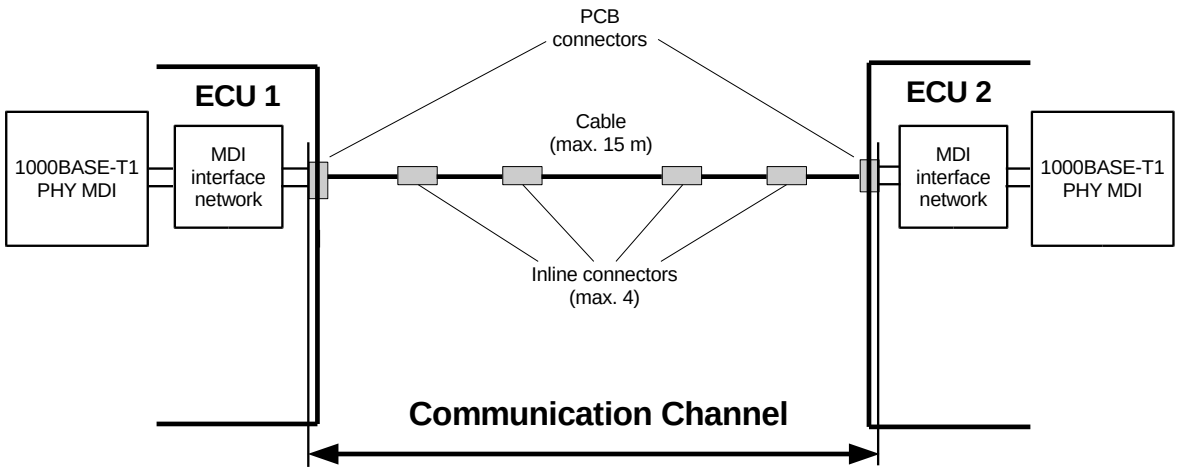

Figure 1-1: Definition of communication channel

The qualification of unshielded cable assemblies shall be done under a defined setup, in order to make results comparable. This document defines various parameters to be tested for the complete communication channel between two Ethernet nodes and also for cables and connectors as a single component of this communication channel. It contains test procedures, test setups and electrical requirements and shall be used as a standardized common scale for the evaluation of complete channels, cables and connectors.

Electrical requirements on the communication channel are also stated in [1]. Other functional requirements such as mechanical and climatic stress and EMC relevant parameters may also be required but would be specified by the customer (OEM) and are not the focus of this document.

2 Channel Definition

In this document the complete electrical wired connection between two ECUs with Ethernet interface is defined as Whole Communication Channel (WCC), i.e. the cable harness, as shown in Figure 2-1. In contrast to the link segment definition within [1], PCB end connectors belong to the communication channel.

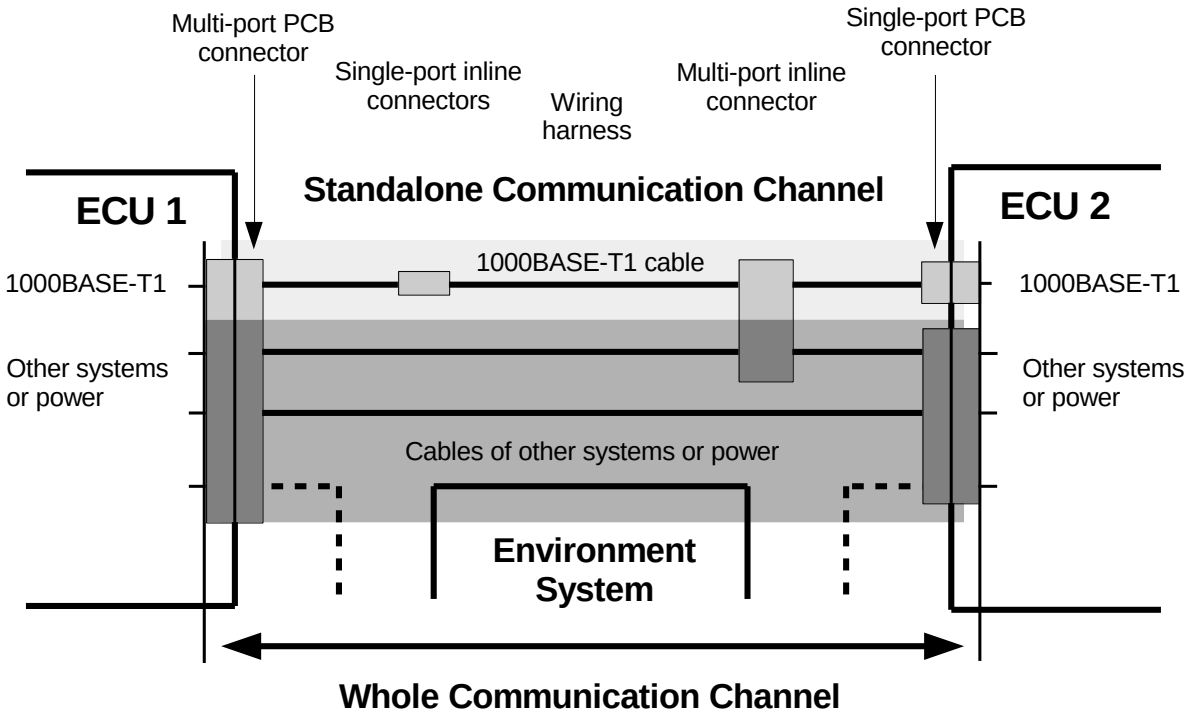

Figure 2-1: Whole Communication Channel and its components

A WCC consists of the Standalone Communication Channel (SCC) that is used for the 1000BASE-T1 Ethernet data transmission between the ECUs and an additional Environment System (ES) for data or power transmission. This model is used to consider the electromagnetic interaction between the Ethernet and other systems that can occur as crosstalk within multi-port connectors, multi-pair cables or bundles of cables.

The SCC consists of two PCB connectors, cable and up to four inline connectors. PCB- and inline-connectors can be single- or multiport type. Multiport means that the connector provides more than one differential port or pair of pins. Hybrid multi-port connectors additionally can have single pins to connect single-ended data signals or power supply lines.

The maximum length of WCC and SCC is not defined as it depends on the electrical characteristics of the components that are used. The components shall be chosen to achieve a maximum length of 15 m with a

maximum of 4 inline connectors. The maximum propagation delay time shall not be exceeded in any case (see [1] and requirements in 6.1.3).

The Standalone Communication Channel and Environment System that are measured shall be manufactured as close to the real application as installed within the vehicle as possible. As usually there is a large diversity of wiring harnesses among an OEM, the DUT can be a simplified generic representation of the complete wiring harness in collaboration with the involved departments.
To allow comparing the electrical properties of components from different suppliers and comparing the measurement results of different test houses, Annex A.4 shows the reference channel and Annex A.5 shows the reference wiring harness.

3 General Definitions and Requirements

All definitions for communication channel, cables and connectors are valid for any temperature within the range that is required by the application and standard atmosphere condition based on [3]. Measurements are generally carried out at room temperature unless specified differently in Section 4.

Figure 3-1 and Figure 3-2 define the port numbering for a multiport connector and wiring harness, respectively, corresponding to the S-parameter port numbering in Table 3-1.

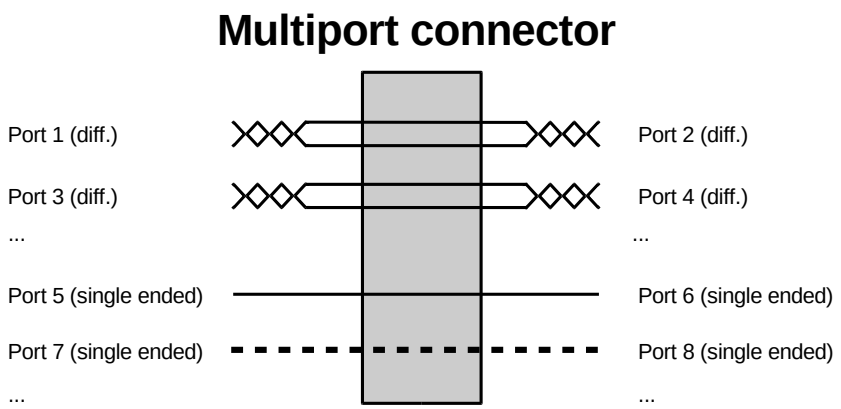

Figure 3-1: Typical definition of S-parameter ports for connectors

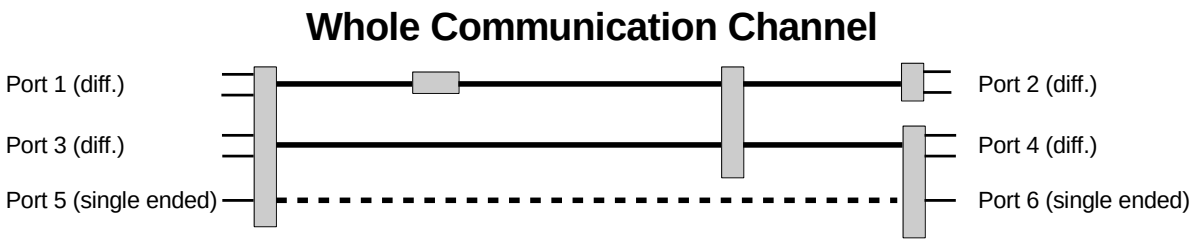

Figure 3-2: Typical definition of S-parameter ports for wiring harness

For all parts of the communication channel the RF requirements are defined in terms of the following RF- and S-parameters:

Symbol	Parameter	Description
Impedance		
CIDM	Z_{RF}	Characteristic Impedance Differential Mode (TDR Measurement)
Single Channel Characteristics (e.g. Port 1,2)		
Propagation Delay	t_d	Propagation Delay, i.e. phase delay according to [4], see equation (3.5)
RL	S_{dd11}, S_{dd22}	Return Loss
IL	S_{dd21}	Insertion Loss
LCL	S_{dc11}, S_{dc22}	Longitudinal Conversion Loss
LCTL	S_{dc12}, S_{dc21}	Longitudinal Conversion Transfer Loss
Cross Talk and Cross Conversion to Neighbour Channels and/or Signal Lines		
ANEXT	S_{dd31}, S_{ddyx}	Alien Near End Cross Talk Loss
AFEXT	S_{dd41}, S_{ddyx}	Alien Far End Cross Talk Loss
PSANEXT	see equation (3.1)	Power Sum Alien Near End Cross Talk Loss
PSAFEXT	see equation (3.2)	Power Sum Alien Far End Cross Talk Loss
PSAACRF	see equation (3.3)	Power Sum Attenuation to Alien Cross Talk Loss Ratio Far End
ANEXTDC ANEXTDS	S_{dc31}, S_{dcyx} S_{ds35}, S_{dsyx}	Alien Near End Cross Conversion Loss Common to Differential Alien Near End Cross Conversion Loss Single-ended to Differential
AFEXTDC AFEXTDS	S_{dc41}, S_{dcyx} S_{ds45}, S_{dsyx}	Alien Far End Cross Conversion Loss Common to Differential Alien Far End Cross Conversion Loss Single-ended to Differential

Table 3-1: Definitions for RF and S-parameter

The following equations can be used to calculate the power-sum crosstalk of connectors and wiring harness.

PSANEXT for a disturbed signal N can be calculated for every port by means of the following equation:

$$PSANEXT(f)_N = -10\, log_{10} \sum_{j=1}^{m} 10^{\frac{-ANEXT(f)_{N,j}}{10}}\, dB \qquad (3.1)$$

where the function $ANEXT(f)_{N,j}$ represents the magnitude (in dB) of the ANEXT loss at frequency f of the disturbing signal j (1 to m of the relevant disturbing neighbour signals) for the disturbed signal N.

PSAFEXT for a disturbed signal N can be calculated for every port by means of the following equation:

$$PSAFEXT(f)_N = -10\, log_{10} \sum_{j=1}^{m} 10^{\frac{-AFEXT(f)_{N,j}}{10}}\, dB \qquad (3.2)$$

where the function $AFEXT(f)_{N,j}$ represents the magnitude (in dB) of the AFEXT loss at frequency f of the disturbing signal j (1 to m of the relevant disturbing neighbour signals) for the disturbed signal N.

PSAACRF for a disturbed signal N can be calculated for every port by means of the following equation:

$$PSAACRF(f)_N = -10\, log_{10} \sum_{j=1}^{m} 10^{\frac{-AACRF(f)_{N,j}}{10}}\, dB \qquad (3.3)$$

where the function $AACRF(f)_{N,j}$ represents the magnitude (in dB) of the AACRF at frequency f of the disturbing signal j (1 to m of the relevant disturbing neighbour signals) for the disturbed signal N. The AACRF is calculated by the difference of the AFEXT loss and the insertion loss magnitudes (in dB) of the disturbing link by the following equation:

$$AACRF(f)_{N,j} = AFEXT(f)_{N,j} - IL(f)_j \quad dB \qquad (3.4)$$

The propagation delay is defined as the phase delay of the transmitted signal. It can be calculated from the expanded phase angle of the S_{dd21} parameter by equation (3.5) as described in [4].

$$t_d = -Phase\ \ (S_{dd21})/(360\ \cdot f) \qquad f \text{ in Hz, } t_d \text{ in s, phase angle in degree} \qquad (3.5)$$

4 General Setup and Measurement Fixtures

4.1 Required Measurement Equipment

For all measurements, a vector network analyzer (VNA) and a TDR measurement system in combination with a test fixture with the following parameters shall be used:

Parameter	Equipment	Parameter	Value
Mixed Mode S-parameter	VNA	Type:	4- port vector network analyzer
		Port reference impedance:	50 Ω single ended
		Frequency range:	f = 300 kHz to 1000 MHz
Characteristic Impedance (CIDM)	TDR test system	Type:	2 channel differential mode
		Port reference impedance:	50 Ω single ended / 100 Ω differential mode
		Rise time:	Pulse generator: ≤ 25 ps internal (≤ 50 ps at measurement fixture) Analyzer: no filter / 500 ps internally adjustable (digital filtering of the reflected signal by using the filtering function of the test equipment) All values 10 % to 90 %
All	Measurement fixture	Depending on the used test standard (see special definitions for cables and connectors)	

Table 4.1-1: Required measurement equipment

Time Domain based measurement instruments may also be used to measure mixed mode S-parameters if they can translate to the VNA settings in Table 4.2-1 and fulfill the calibration accuracy requirements in Table 4.2-2.

VNAs may also be used to perform impedance measurements, normally performed with a TDR test system if it can provide an equivalent pulse with 500 ps rise time as specified in Table 4.1-1. In this case, the requirement for 25 ps internally and 50 ps at the measurement fixture does not apply. The measurement should be carried out with the VNA settings given in Table 4.2-3. The comparability of the time domain results measured with a VNA to results captured with a TDR should be demonstrated depending on the specific equipment type.

4.2 Vector Network Analyzer (VNA) Settings

To assure a high degree of reliability for transmission measurements, the following precautions are required ([2]):

1. The reference plane of the calibration shall coincide with the measurement reference plane. In case of differences, the magnitude of errors shall be determined and the measurement fixture parameters shall be characterized to meet the requirements in Section 4.4.
2. Accurate and consistent resistor loads shall be used for each pair throughout the test sequence.
3. The cable shall be placed to satisfy the requirements for the single tests and needs to be fixed throughout the test sequence.
4. Cable and adapter stresses, as caused by physical flexing, sharp bends and restraints shall be avoided before, during and after the tests. Test cables and adapters shall be selected for high phase stability in order to meet the requirements in Section 4.4 during the complete test sequences including handling operation for connecting and disconnecting the DUTs.
5. Coaxial, balanced lead and traces at the measurement fixture shall be kept as short as possible to minimize resonance and parasitic effects.
6. Overload conditions of the network analyzer shall be avoided.
7. The VNA shall provide sufficient stability and low drift to ensure to meet the accuracy requirements in Table 4.2-2 during the entire test sequence.

To achieve high degree of comparability of test results the VNA settings given in Table 4.2-1 are recommended. The used VNA setting for each parameter of Table 4.2-1 shall be documented in the test report.

Parameter	Value
Sweep f_{Start}	300 kHz
Sweep f_{Stop}	1 GHz
Sweep type	Logarithmic
Sweep points	1600
Output power	minimum -10 dBm
Measurement bandwidth	≤ 500 Hz
Port reference impedance differential mode [1]	100 Ω
Port reference impedance common mode [1]	25 Ω for connector measurements and MDI Test Head 200 Ω for all other measurements

[1] The single ended 4-port S-parameters are captured with 50 Ω port reference impedances. This results in 100 Ω differential mode and 25 Ω common mode port reference impedances after transforming the single ended S-parameters to the mixed mode S-parameters. The mixed mode S-parameters can be converted or re-normalized to the port reference impedances required in Table 4.2-1 by using the VNA's post processing capabilities or by alternative post processing software. The term "port reference impedance" is also known as "logic port impedance" depending on the equipment or software type.

Data calibration kit (VNA)	used kit for calibration
Averaging function	May be applied, but not mandatory
Smoothing function	Deactivated

Table 4.2-1: Recommended VNA settings

The VNA calibration accuracy shall be verified by measuring the mode conversion and return loss parameters for a direct thru-thru connection between the balanced ports at the calibration plane (Figure 4.2-1). A matched pair of precision adaptors is recommended to connect the test cables.

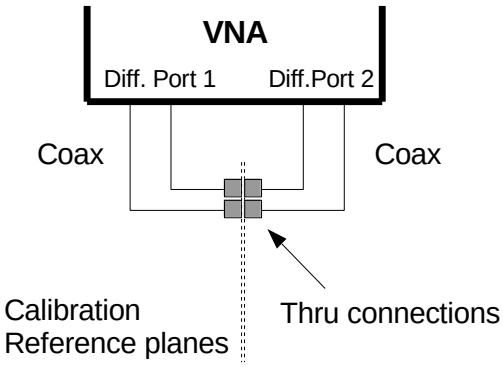

Figure 4.2-1: Thru-thru connection for verification of VNA calibration accuracy

The LCL, LCTL and RL parameters shall comply with the requirements given in Table 4.2-2. The LCL calibration accuracy may also be verified with measurement cables in open condition at the calibration plane.

Test Parameter		**Requirement**
RL	S_{dd11}, S_{dd22}	$\geq \begin{pmatrix} 44 & 1 \leq f < 75 \\ 26 - 20\log\left(f/600\right) & 75 \leq f \leq 600 \end{pmatrix} dB$ $1 \leq f \leq 600$, frequency *f* in MHz Port reference impedances: 100 Ω (DM), 200 Ω (CM)
LCL LCTL	S_{dc11}, S_{dc22} S_{dc21}, S_{dc12}	$\geq \begin{pmatrix} 61 & 10 \leq f \leq 80 \\ 83 - 11.51\log(f) & 80 < f \leq 600 \end{pmatrix} dB$ $10 \leq f \leq 600$, frequency *f* in MHz Port reference impedances: 100 Ω (DM), 200 Ω (CM)

Table 4.2-2: VNA calibration accuracy requirements

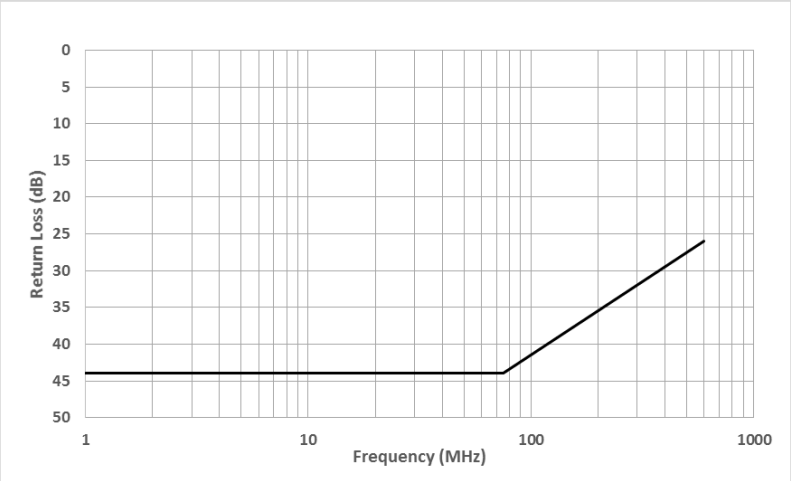

Figure 4.2-2: Return loss requirement for VNA calibration accuracy

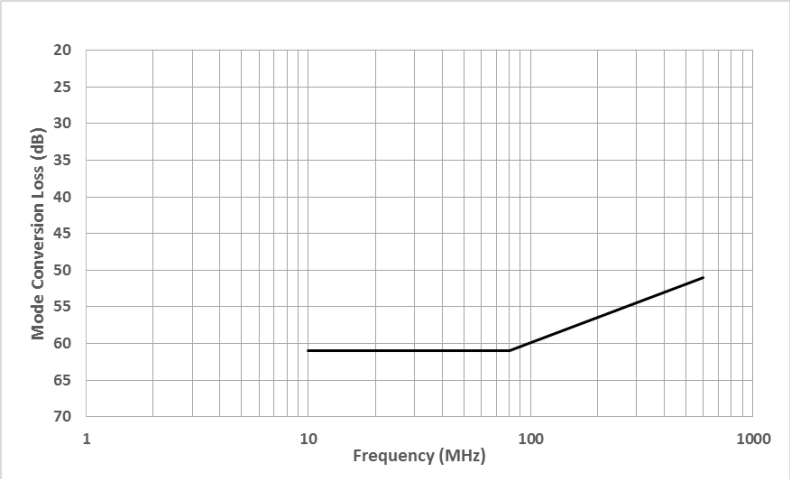

Figure 4.2-3: LCL / LCTL requirement for VNA calibration accuracy

If impedance measurements are carried out with VNA the following settings are recommended to ensure equivalent results to a TDR based measurement.

Parameter	**Value**
Sweep f_{Start}	1 MHz, (10 MHz) [2]
Sweep f_{Stop}	2 GHz, (20 GHz) [2]
Sweep type	Linear
Sweep points	2000
Filtering	Hann window
TDR Type	Step
Output power	minimum -10 dBm

[2] Values in brackets are suitable for characterization of test fixtures (Chapter 4.4.1) and MDI test heads (Chapter 7.2).

Measurement bandwidth	≤ 500 Hz
Port reference impedances	50 Ω single ended port impedances (This results in 100 Ω differential mode reference impedance after conversion to mixed mode parameters.)
Data calibration kit (VNA)	used kit for calibration
Averaging function	May be applied, but not mandatory
Smoothing function	deactivated

Table 4.2-3: Recommended VNA settings for impedance measurements

4.3 Presentation of Measurement Results

Test results shall be documented in the following way:

- Documentation of test conditions (e.g. humidity, temperature, cable length)
- Documentation of used calibration kit and of calibration accuracy in thru-thru configuration
- Pictures of test set-up and measurement fixture
- Documentation of measurement fixture characterization and of optional correction methods such as fixture de-embedding, phase correction, re-normalization etc.
- Results for S-parameter
    - Result as dB value with related limit
    - Diagram with logarithmic frequency axis up to minimal f = 1000 MHz
- Results for TDR- Measurements
    - Result as differential impedance (Ohms) with related limit
    - Measurement result and corrected data (according to Annex B) are to be presented in one diagram in the following format:
        - Linear scale for X- axis in time
        - Linear scale for additional X- axis in length (m, calculated using 2/3 of c_0 or real phase velocity of cable / connector and correction of two-way of pulse propagation)

4.4 Measurement Fixtures

Measurement fixtures shall provide sufficient electrical and mechanical quality, so that the measurement result is not dominated by the characteristics of the measurement fixture.

The used measurement fixtures need to have low insertion loss, high symmetry within the two lines of a differential pair and very good matching to 50 Ω single ended impedance.

Measurement fixtures shall provide a low resistance, low inductance connection from fixture ground to the surface of the conductive table or conductive drum, e.g. by using conductive plates or stands. This reference ground connection shall be direct, reaching up 10 mm to the connection point of the DUT. The electrical

limits in sub-sections 4.4.1 to 4.4.3 shall be met. The measurement fixtures or design recommendations for it should be provided by the connector or cable manufacturer. Examples of appropriate measurement fixtures are given in Annex A.1.

Phase stability of VNA test cables and test fixtures is essential to ensure sufficient accuracy of mode conversion measurements. The phase reference plane may optionally be moved to the DUT by VNA features such as “port extension”. The detailed description of such techniques is not scope of this document and the correct application shall be demonstrated and documented. The open fixture balance requirements in Table 4.4.2-1 shall still be met before and after applying the phase correction features mentioned above. Serial numbers shall be assigned to the measurement fixtures to allow individual identification.

Test fixtures based on printed circuit boards as shown in Figure 4.4-1 are recommended for connector and channel tests.

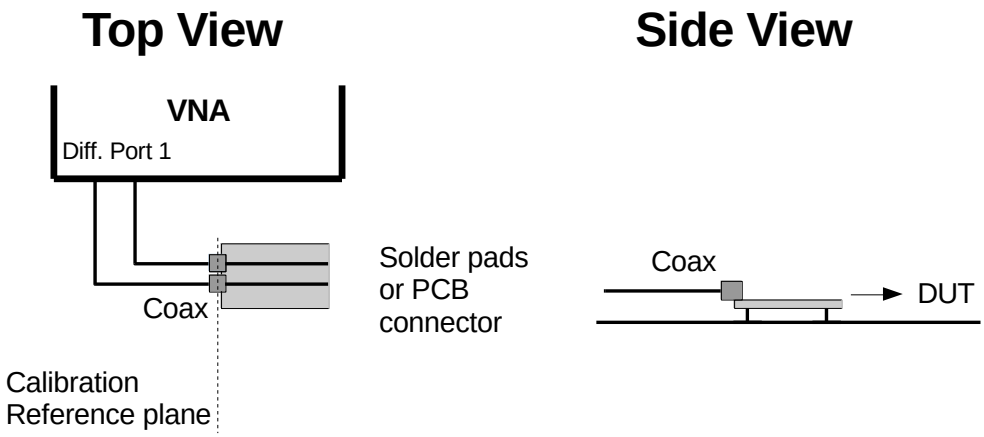

Figure 4.4-1: PCB based measurement fixture example

Direct test fixtures as shown in Figure 4.4-2 are recommended for cable tests to minimize the fixture length when attaching the bare cable leads.

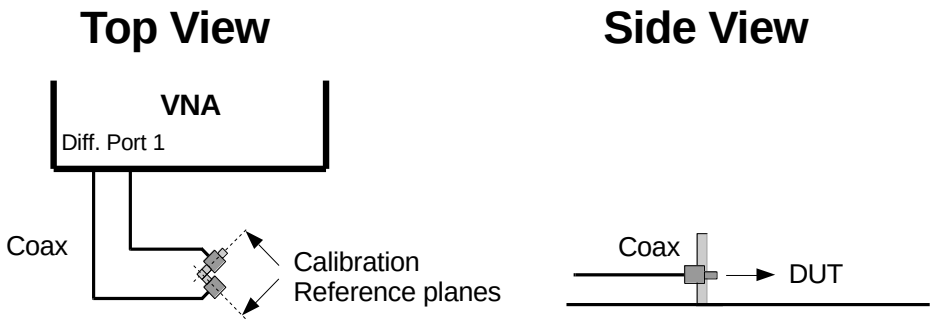

Figure 4.4-2: Direct measurement fixture example

4.4.1 Impedances and Termination

The characteristic impedance differential mode is 100 Ω and is matched in some test configurations by dual 50 Ω load terminations. The impedance of the test fixture shall be within 100 Ω ± 5 % at a rise time of 50 ps. An impedance tolerance of ± 10 % is permitted if the 5 % limit is exceeded no longer than 120 ps round trip time or 60 ps propagation time (see Figure 4.4.1-1).

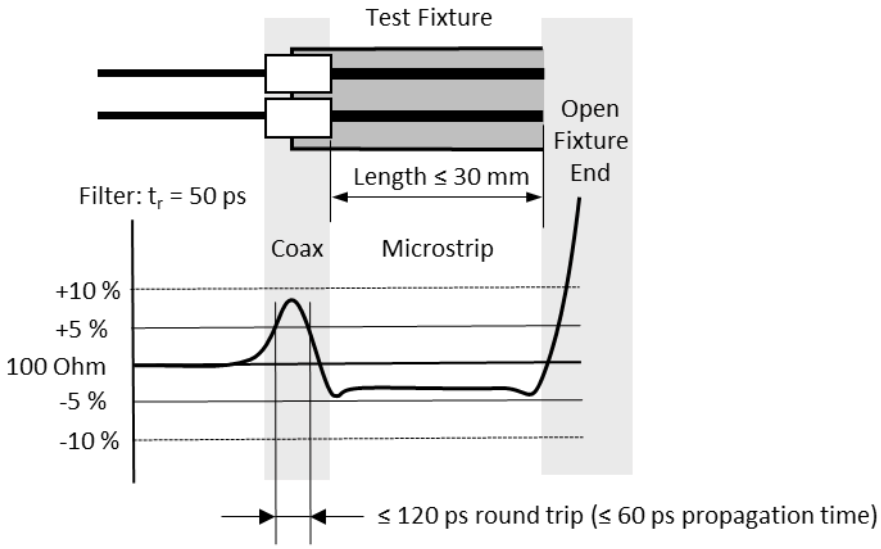

Figure 4.4.1-1: Characteristic impedance of test fixtures

The maximum trace length on PCB based test fixtures shall not exceed 30 mm. Longer trace lengths are permitted in case of design constraints, e.g. for larger size multiport connectors if the following requirements are met to avoid inaccurate return loss results:

- Impedance tolerance of the traces smaller than ± 5 %

or

- Removing the fixture by de-embedding techniques or by shifting the calibration plane to the DUT leads; the detailed description of such techniques is not scope of this document. The correct application of these methods needs to be demonstrated and documented. The open fixture balance requirements in Table 4.4.2-1 shall still be met after applying the correction methods mentioned above.

When the measurement fixture is used as termination and is not connected to the measurement VNA, it shall provide 50 Ω single ended termination to common ground for each line of the differential pair, resulting in a common mode termination of 25 Ω.

4.4.2 Balance

Unbalance within measurement fixtures can be caused by length differences within the differential pairs or capacitive or inductive unbalance. The type of PCB material with its structure and orientation of the glass weave have a major impact, as well as the thickness of the traces.

The mode conversion properties of the measurement fixture can be measured against the open port in a differential one port measurement to obtain LCL (S_{dc11}).

After calibrating to the reference plane at the coaxial end of the measurement cables, connect to the measurement fixture and measure mode conversion against the open end of the fixture as shown in Figure 4.4.2-1. If the measurement fixture contains a PCB connector to be tested, the characterization of the measurement fixture shall take place without the connector soldered to it. For board connectors that require a specific design of PCB footprint, then an alternative characterization method may be specified by the connector supplier.

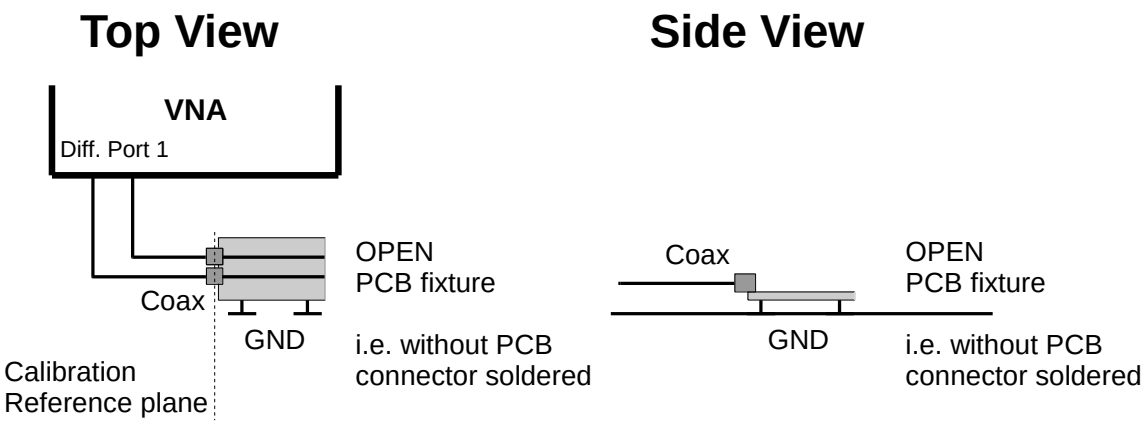

Figure 4.4.2-1: Validation of measurement fixture balance

The mode conversion parameter LCL (S_{dc11}) of the measurement fixture shall comply with the requirements given in Table 4.4.2-1.

Test Parameter		Requirement
LCL	S_{dc11}	$\geq \begin{pmatrix} 61 & 10 \leq f \leq 80 \\ 83 - 11.51\log(f) & 80 < f \leq 600 \end{pmatrix} dB$ $10 \leq f \leq 600$, frequency f in MHz Port reference impedances: 100 Ω (DM), 200 Ω (CM)

Table 4.4.2-1: Measurement fixture balance requirements

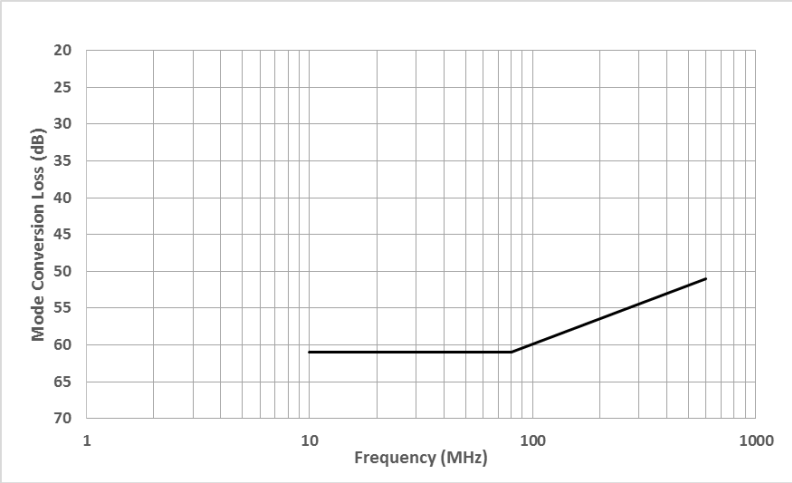

Figure 4.4.2-2: LCL requirement for fixture balance

4.4.3 Crosstalk

The internal crosstalk within test fixtures for multiport connectors shall be lower than the limit you want to measure against. The near end crosstalk of the test fixture needs to be measured without the PCB connector soldered to it. The transmission from each port shall be measured to any other neighbouring port. For board connectors that require a specific design of PCB footprint, then an alternative characterization method may be specified by the connector supplier.

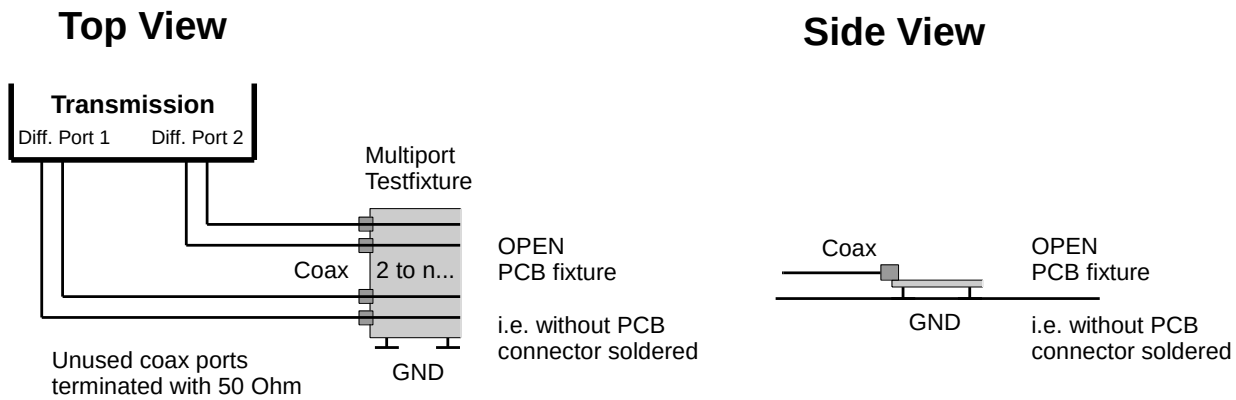

Figure 4.4.3-1: Validation of multiport measurement fixture crosstalk

The crosstalk within multi-port measurement fixtures shall comply with the requirements given in Table 4.4.3-1.

Test Parameter		Requirement
PSANEXT Loss	S_{dd31}, S_{ddyx}	$\geq \begin{pmatrix} 63-10\log\left(f/100\right) & 1\leq f\leq 100 \\ 63-15\log\left(f/100\right)-6\left(f-100/400\right) & 100<f\leq 600 \end{pmatrix} dB$ $1\leq f\leq 600$, frequency *f* in MHz Port reference impedances: 100 Ω (DM), 200 Ω (CM)
ANEXTDC Loss ANEXTDS Loss	S_{dc31}, S_{dcyx} S_{ds31}, S_{dsyx}	$\geq \begin{pmatrix} 61 & 10\leq f\leq 80 \\ 83-11.51\log(f) & 80<f\leq 600 \end{pmatrix} dB$ $10\leq f\leq 600$, frequency *f* in MHz Port reference impedances: 100 Ω (DM), 200 Ω (CM)

Table 4.4.3-1: Measurement fixture crosstalk requirements

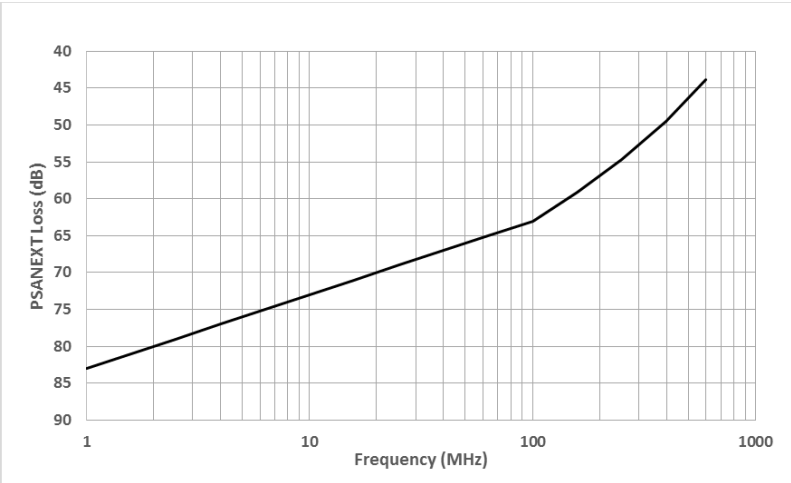

Figure 4.4.3-2: PSANEXT requirement for fixture cross talk

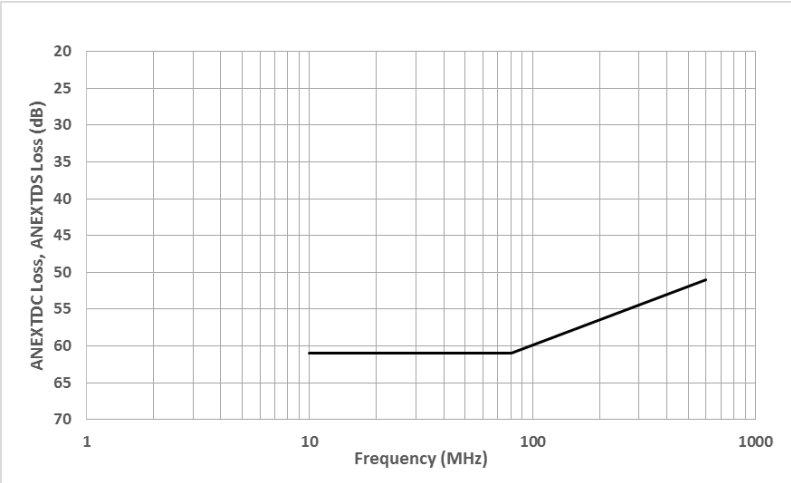

Figure 4.4.3-3: ANEXTDC and ANEXTDS requirement for fixture cross mode conversion

5 Measurement Setups

5.1 Measurement Setups for Connectors

5.1.1 Connector Setups (SCC Parameter)

Connectors are measured including a short piece of cable on each cable connector. This allows capturing the properties of the whole connector including the area of wire transition from contacts to the cable. The transition area therefore is part of the measurement result and shall be assembled as used in the application. The cable shall meet the requirements in Section 6.1.2 and should have a characteristic impedance as close as possible to the system impedance. The length shall be no longer than 30 mm to keep the influence of the cable on the measurement result relatively low. For inline connectors, the length of the cable should be identical on both sides. The cable length is measured along that cable section where the cable geometry remains unchanged compared to the original cable construction, i.e. the length of the remaining cable jacket. In case of unjacketed cables, the distance between the first and the last crossing location of the twisted wires shall be measured (see Figure 5.1.1-1). A multiple of half of the cable twist length from the contact area to the measurement fixture will provide the same orientation of the conductors and ease handling. Omitting the cable, i.e. cable length zero, is not permitted.

The transition length between cable and test fixture shall be as short as possible depending on the actual fixture design. The transition length between cable and connector shall comply the specifications of the component manufacturers.

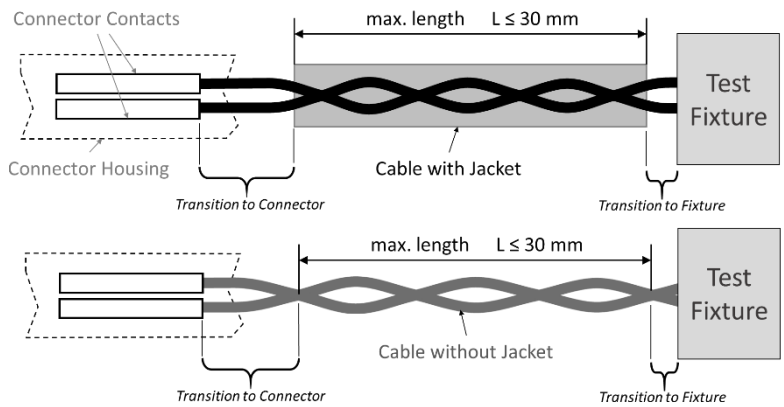

Figure 5.1.1-1: Maximum cable length for connector measurements

Connectors should be measured with PCB based fixtures as shown in Figure 4.4-1 on both sides of the DUT. The board connectors are mounted directly on the fixture PCB as specified for the individual component by the manufacturer. The free cable leads of the cable side connector are attached to the PCB traces by soldering or by other appropriate methods. The fixture balance requirements should still be met when the cable leads

are attached. The cable ends and the contacts within the DUT shall be placed in 10 mm height over a contiguous conducting ground plane. This distance may be increased as necessary in case of mechanical constraints, e.g. due to large connector housings. A dielectric insulation material ($\varepsilon_r < 1.4$) between the connector and the ground plane may be used for mechanical support. The dimensions of the ground plane need to be large enough to support the DUT including 30 mm distance to the ground perimeter (3 x height above the ground plane). Figure 5.1.1-2 and Figure 5.1.1-3 show test setups to measure SCC S-parameters of mated inline connectors and mated board connectors:

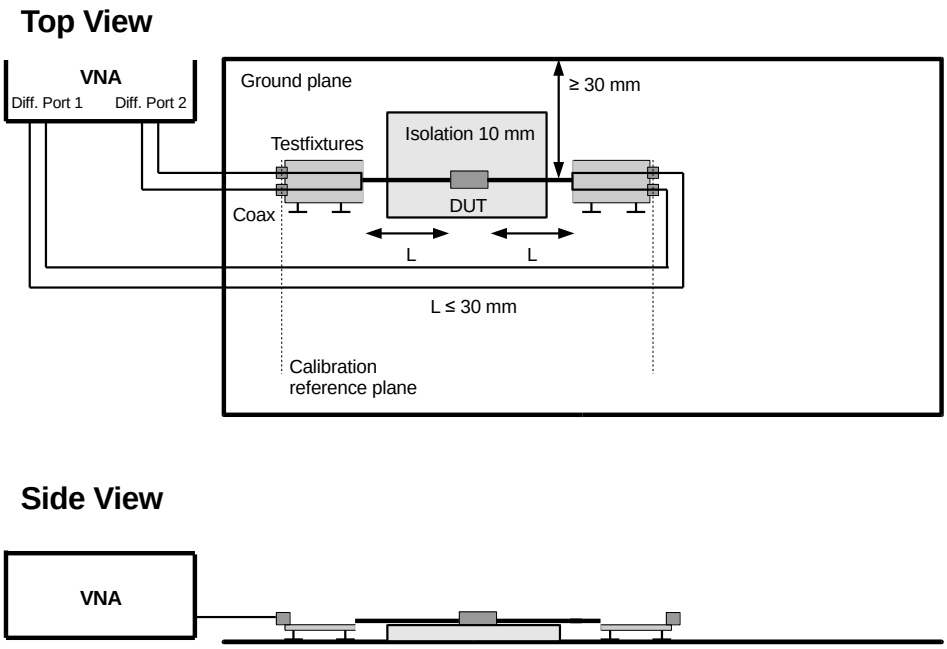

Figure 5.1.1-2: Inline connector VNA measurement setup

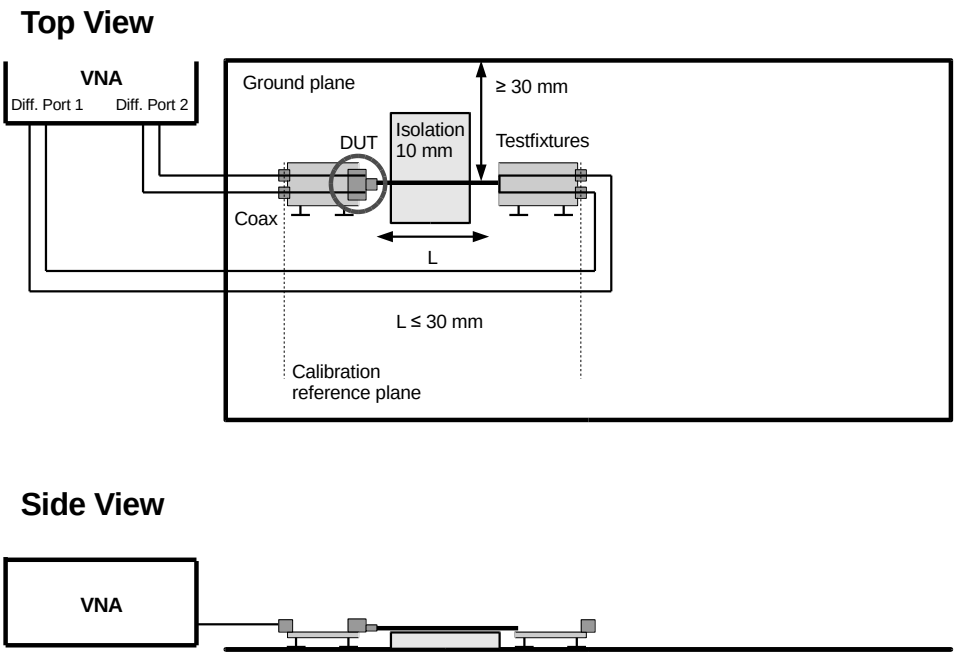

Figure 5.1.1-3: PCB connector VNA measurement setup

The insertion loss and propagation delay of test fixtures and cable leads may be subtracted from the transmission measurement result of the PCB or inline connector. Therefore, the DUT is replaced by a direct through cable connection as shown in Figure 5.1.1-4. The same cable type shall be used with a length of 1 x L for PCB connectors and 2 x L for inline connectors, where L is identical to the length used in the connector measurement. This compensation method is only applicable for measuring the insertion loss and propagation delay parameter.

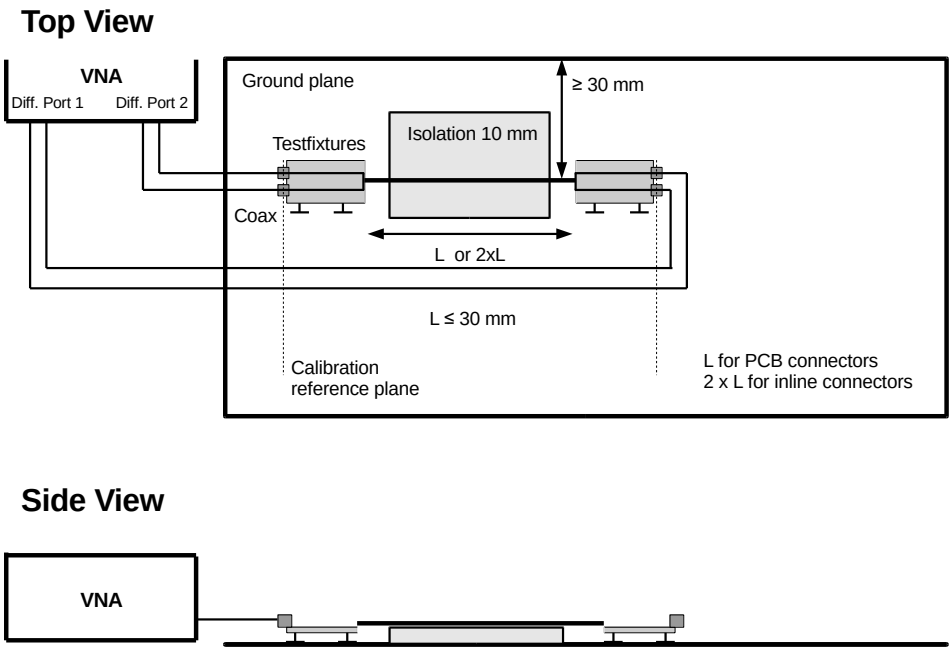

Figure 5.1.1-4: Thru connection to measure insertion loss and propagation delay of fixtures and cable leads

CIDM measurements are carried out in a one port differential setup. The same setup as used for VNA measurements may be used, but with the termination of the measurement fixture with 50 Ω loads on the far end side. The rise-time for the measurements is 500 ps and may be applied by software filtering within the TDR scope.

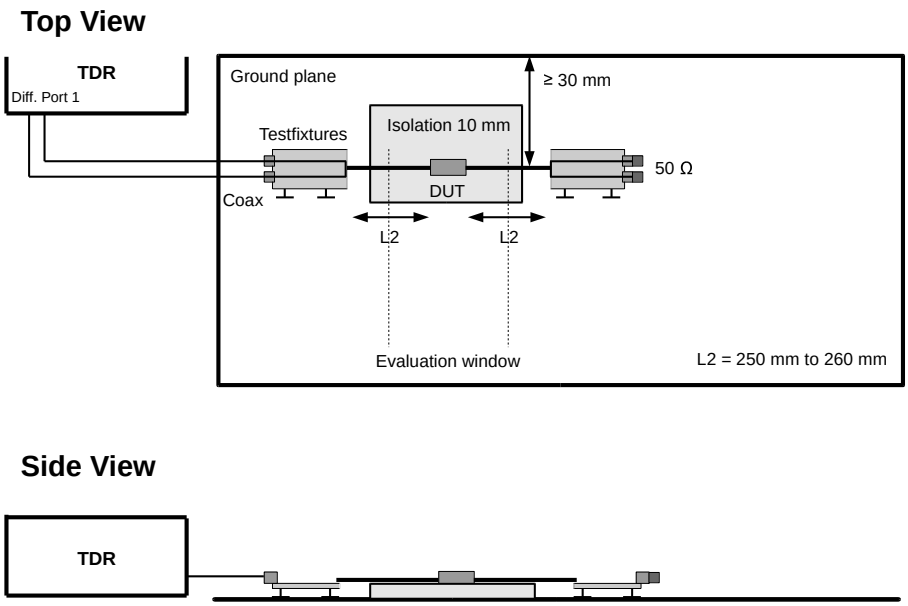

Figure 5.1.1-5: Inline connector CIDM measurement setup

The differential impedance of PCB connectors is measured in combination with its corresponding cable connector counterpart in a 250 mm to 260 mm cable assembly. The far end side of the cable is terminated at the test fixture. The electrical length on the test fixture between the coaxial ports and the DUT needs to be sufficiently long to separate the DUT from the coaxial connectors at 500 ps rise time.

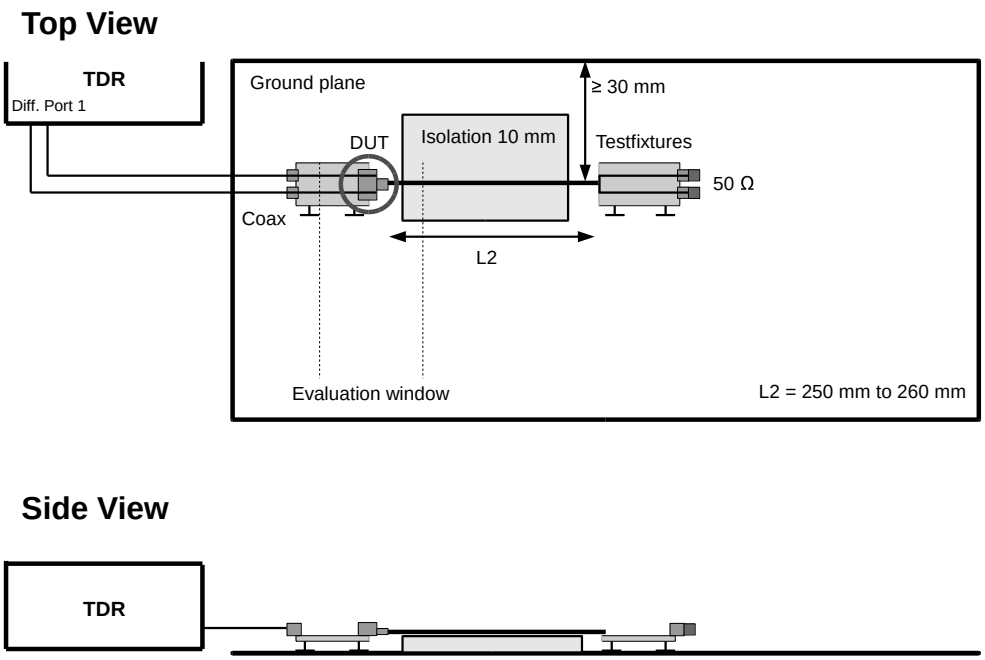

Figure 5.1.1-6: PCB connector CIDM measurement setup

5.1.2 Connector Setups for ES Parameter

Additional parameter in the environmental system are crosstalk and cross conversion in multiport connectors. Such connectors consist of one or more Ethernet differential pairs and potentially additional other contacts. These additional contacts can be used as general purpose signal line, power supply or differential signals other than Ethernet. (see Figure 5.1.2-1).

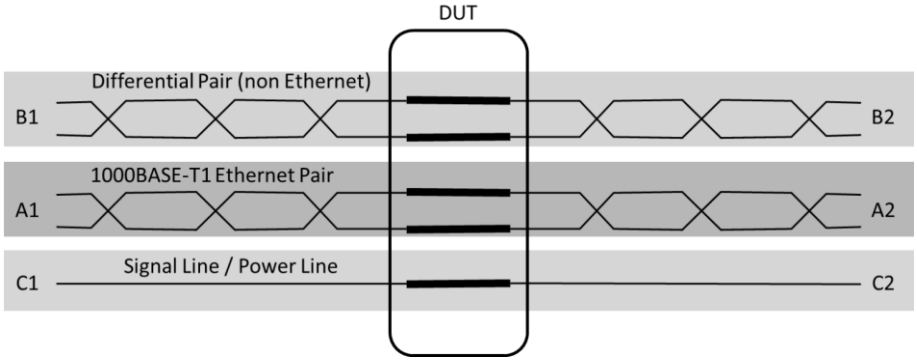

Figure 5.1.2-1: Multi-port inline connector

The individual pairs of multiport connectors shall be tested as like single ports connectors according to the measurement setup described in Chapter 5.1.1. Suitable PCB based multiport test fixtures shall be used for the multiport board connectors on both DUT sides. The test fixtures shall fulfil the balance requirements described in Chapter 4.4.2 and the impedance requirements including trace length given in Chapter 4.4.1. The crosstalk requirements in Section 4.4.3 shall be met in addition. The multiport board connectors are mounted directly on the multiport fixture PCB as specified for the individual component by the manufacturer. The free cable leads of the cable side connector are attached to the traces of the multiport fixture board by soldering or by other appropriate methods. The fixture balance requirements should still be met when the cable leads are attached. The requirements to the short cable pieces on the cable side of a multiport connector are the same as specified in Section 5.1.1 for single port connectors. The DUT shall be placed at a height of 10 mm above conductive ground in the same way as specified for single port connectors in Section 5.1.1. Unused fixture ports shall be terminated during the individual measurements.

Figure 5.1.2-2 shows the differential port 1 of the VNA connected to the far end port, in order to measure AFEXT, AFEXTDC and AFEXTDS of the multi-port PCB connector. Unused differential or single ended ports are terminated with 50 Ω loads.

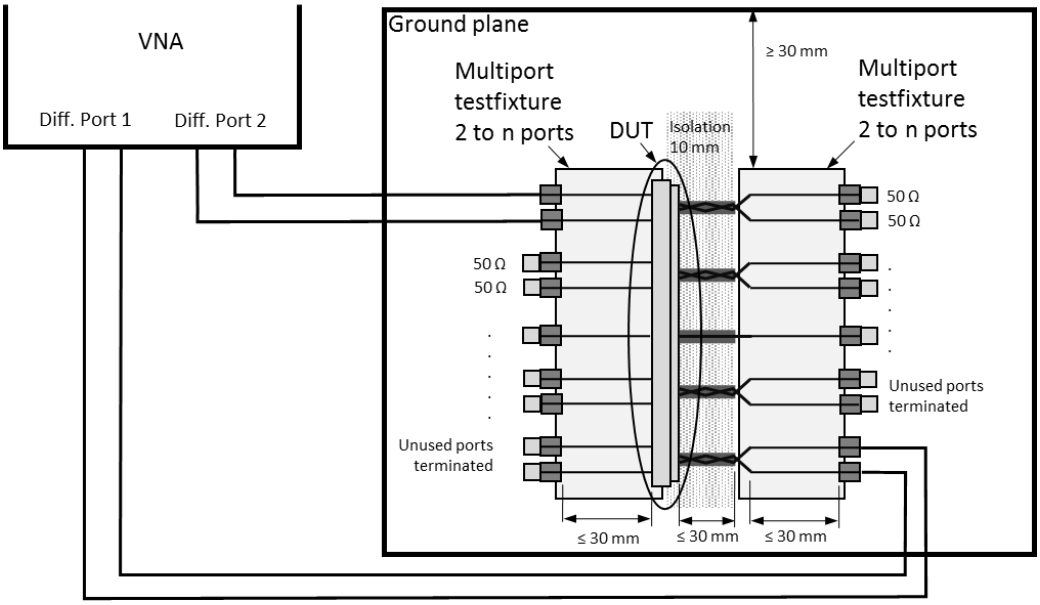

Figure 5.1.2-2: Multi-port PCB connector measurement setup for AFEXT, AFEXTDC and AFEXTDS

Figure 5.1.2-3 shows port 1 connected to the near end measurement fixture to measure ANEXT of the multi-port PCB connector.

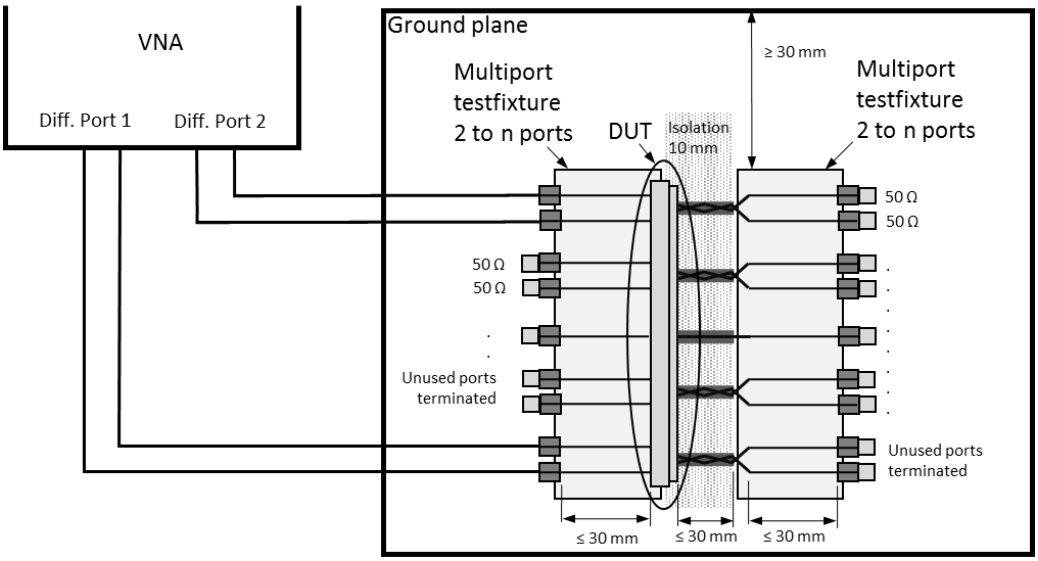

Figure 5.1.2-3: Multi-port PCB connector measurement setup for ANEXT

Figure 5.1.2-4 shows the differential port 1 of the VNA connected to the far end port, in order to measure AFEXT, AFEXTDC and AFEXTDS of the multi-port inline connector.

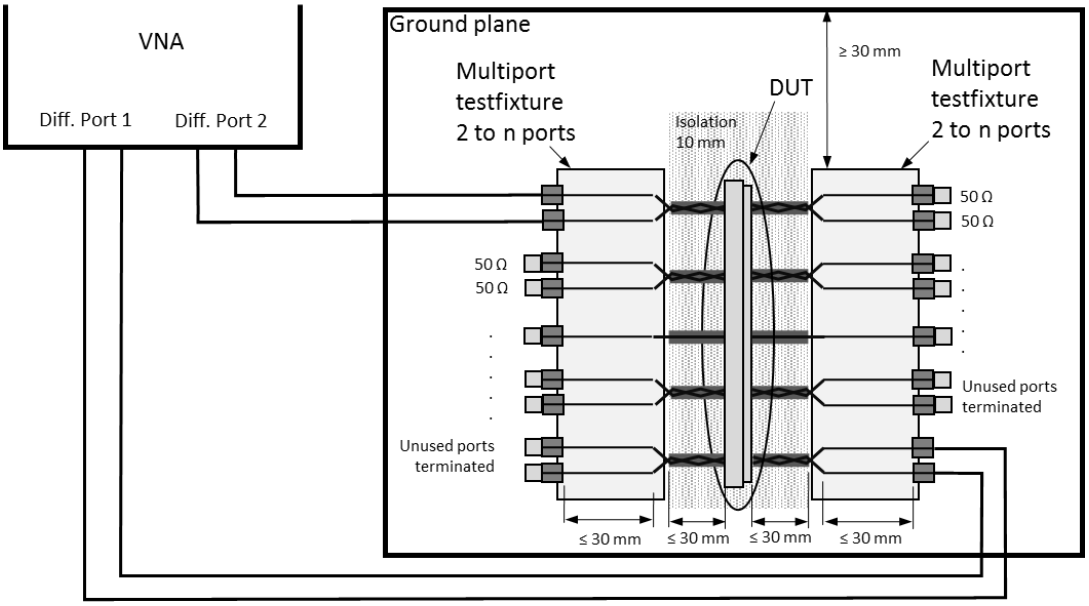

Figure 5.1.2-4: Multi-port inline connector measurement setup for AFEXT, AFEXTDC and AFEXTDS

Figure 5.1.2-5 shows port 1 connected to the near end measurement fixture in order to measure ANEXT of the multi-port inline connector.

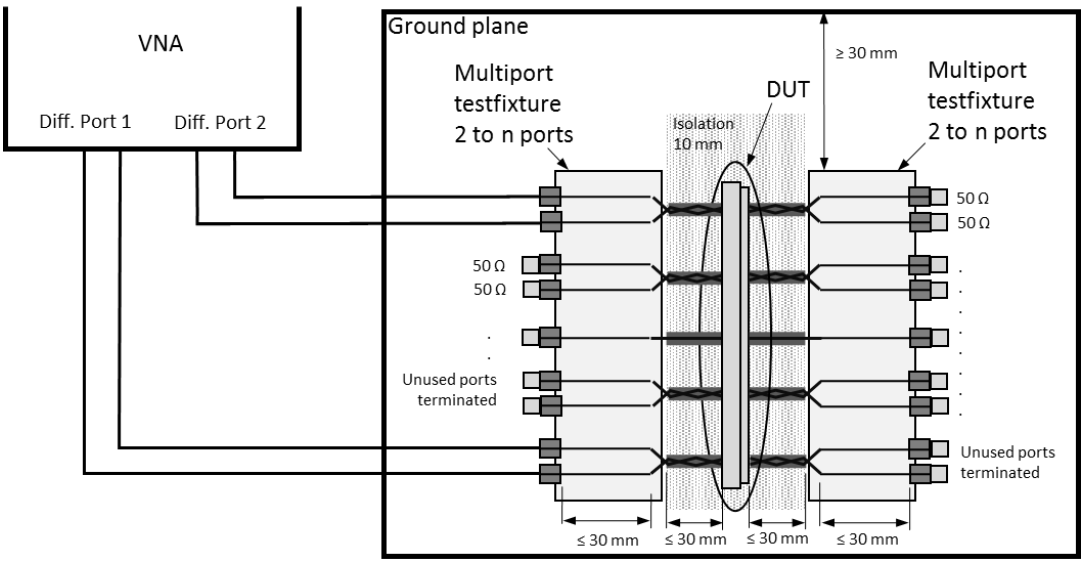

Figure 5.1.2-5: Multi-port inline connector measurement setup for ANEXT

The measurement shall be repeated for every pair of the multi-port measurement fixture. To calculate the power-sum crosstalk (PSANEXT and PSAFEXT) for each port, the measurement results for all ports need to be summed. Equations how to calculate the power-sum crosstalk from individual transmission measurements

are given in Chapter 3. Each port to be used with 1000BASE-T1 shall comply with the specified alien-crosstalk limits in Section 6.2.1.

5.2 Measurement Setups for Cables and Channel

The basic methodology for measuring complete channel assemblies including cables and connectors is similar as for measuring the cables as component. Therefore, both topics are described jointly in this chapter.
Common for all cable and channel measurements are the following configuration details: The DUT shall be placed on dielectric insulation material ($\varepsilon_r < 1.4$) of 10 mm height over a contiguous conducting ground plane. The ground plane can be either a conductive metal plate or a conductive drum as given in Annex A.2. The dimensions need to be large enough to support the DUT including 30 mm distance to the ground perimeter (3 x height above the ground plane). The distance between any cable meanders or windings shall also be at least 30 mm to limit coupling between different portions of the cable. The minimum bending radius of the DUT and test leads shall be considered as well. The measurement fixtures need to be grounded and the VNA may be placed on the conducting ground plane or next to it.

5.2.1 Cable and Channel Setups for SCC Parameter

To measure SCC parameters of cables and complete channels, transmission, reflection and mode conversion shall be measured by means of a VNA or equivalent time domain based equipment. The parameters are measured on single cables and channel assemblies and not within the context of the environmental system, i.e. wiring harness. However, the insertion loss and return loss limits shall also be met within the environmental system.
To allow comparing the electrical properties of components from different suppliers and comparing the measurement results of different test houses, Annex A.4 defines a reference communication channel.
The DUT shall be placed on a table with conducting ground plane and 10 mm isolation material height as shown in Figure 5.2.1-1, or on a conducting drum with 10 mm isolation material height as shown in Figure 5.2.1-2. More detailed information on a proper cable arrangement using conduction drum is given in Annex A.2. PCB and inline connectors that are shown in the drawings below are valid for communication channel measurements only. In case of cable measurements, the wires are attached directly to the fixtures without any connectors. The total DUT length of cable component measurements shall be 10 m. The measurement fixtures need to be grounded.

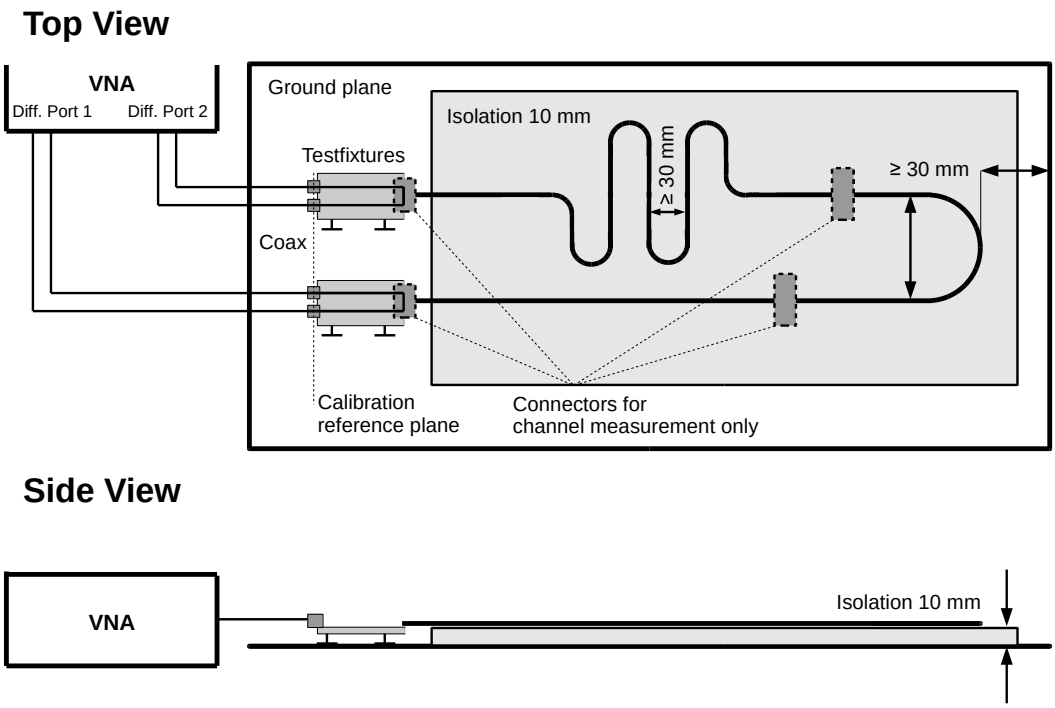

Figure 5.2.1-1: VNA measurement setup using conducting ground plane

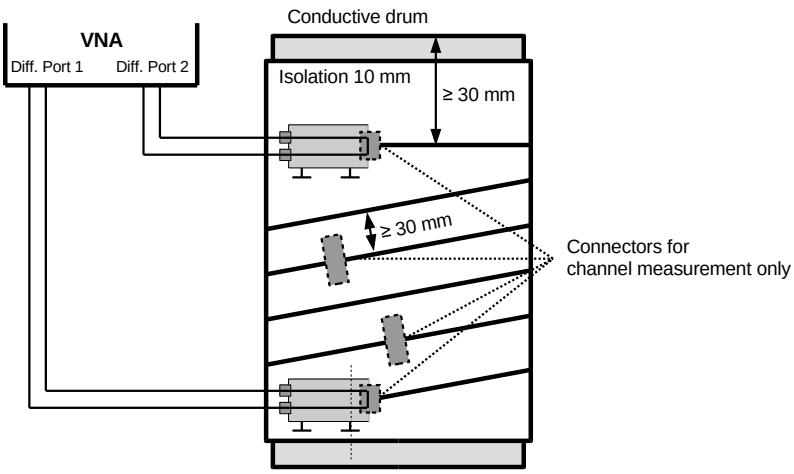

Figure 5.2.1-2: VNA measurement setup using conducting drum

TDR measurements are carried out in a one port differential setup as shown in Figure 5.2.1-3 over conducting ground plane or with conducting drum as shown in Figure 5.2.1-4. The same setup as for VNA measurements may be used, except that the far end measurement fixture may be terminated or be connected to a differential port of the measurement instrument. For cable measurements within the evaluation window of 0.5 m to 1.5 m the far end of the DUT may also be left open to ease handling. In this case, it shall be made sure that the results are unambiguous and not falsified by reflections at the open end of the DUT.

The rise-time for the measurements is 500 ps and may be applied by software filtering of the reflected signal within the TDR scope. The measurements may also be carried out by means of VNA and transformation into time domain. For long channels the TDR measurement technique leads to incorrect measuring results. To prevent getting faulty results the correction procedure as described in Annex B should be used.

The impedance of the cable shall comply with the specified limit within an evaluation window of 0.5 m to 1.5 m. The impedance of a communication channel is measured over the whole length of the link for information purposes only.

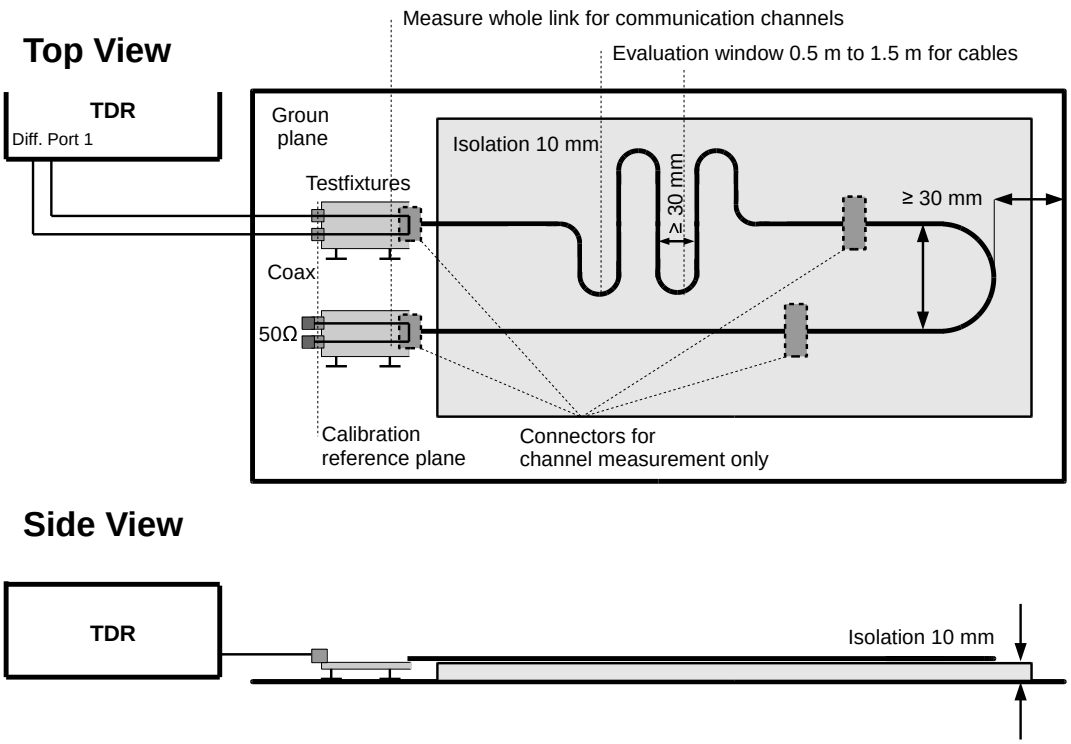

Figure 5.2.1-3: TDR measurement setup using conducting ground plane

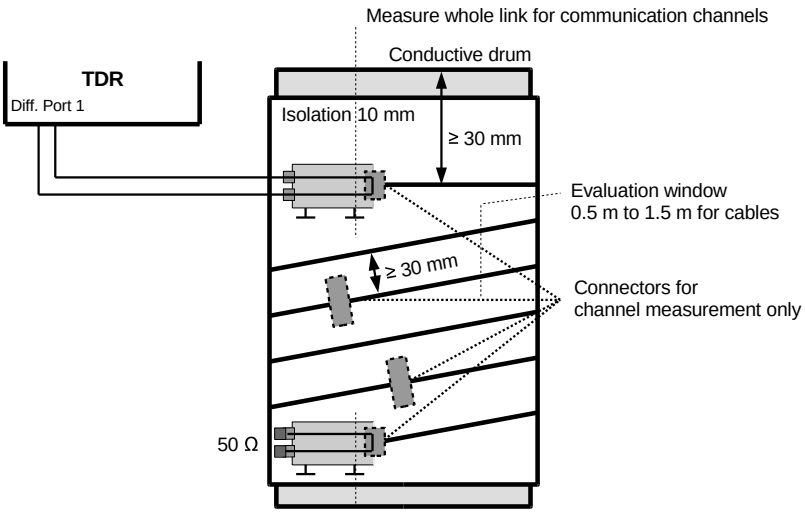

Figure 5.2.1-4: TDR measurement setup using conducting drum

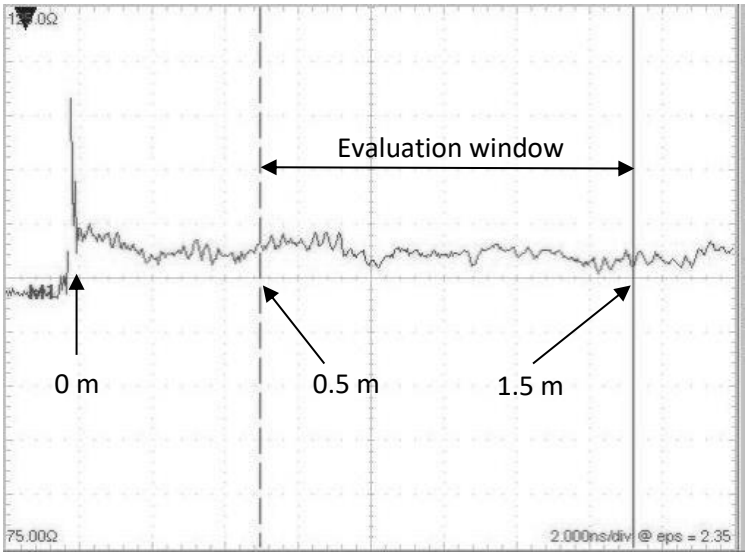

Figure 5.2.1-5: Example for TDR measurement with definition of evaluation window for CIDM limit

5.2.2 Cable and Channel Setups for ES Parameter

The coupling parameters of Whole Communication Channels in the Environmental System are crosstalk and cross conversion to neighbour wires in a bundle of cables that is a meaningful representation of a wiring harness as it is intended to be used in the real application. To allow comparing the electrical properties of components from different suppliers and comparing the measurement results of different test houses, Annex A.5 defines a reference wiring harness for information only. The alien crosstalk within the cable bundle is determined by transmission measurements between the individual channels and other wires within the harness.

The DUT shall be placed on a table or drum with conducting ground plane and 10 mm isolation material height as shown in Figure 5.2.2-1. All ports of measurement fixtures that are not connected to the VNA but still part of the wiring harness shall be terminated at the coaxial ports of the measurement fixture with single ended 50 Ω. All measurement fixtures need to be grounded according to Section 4.4.

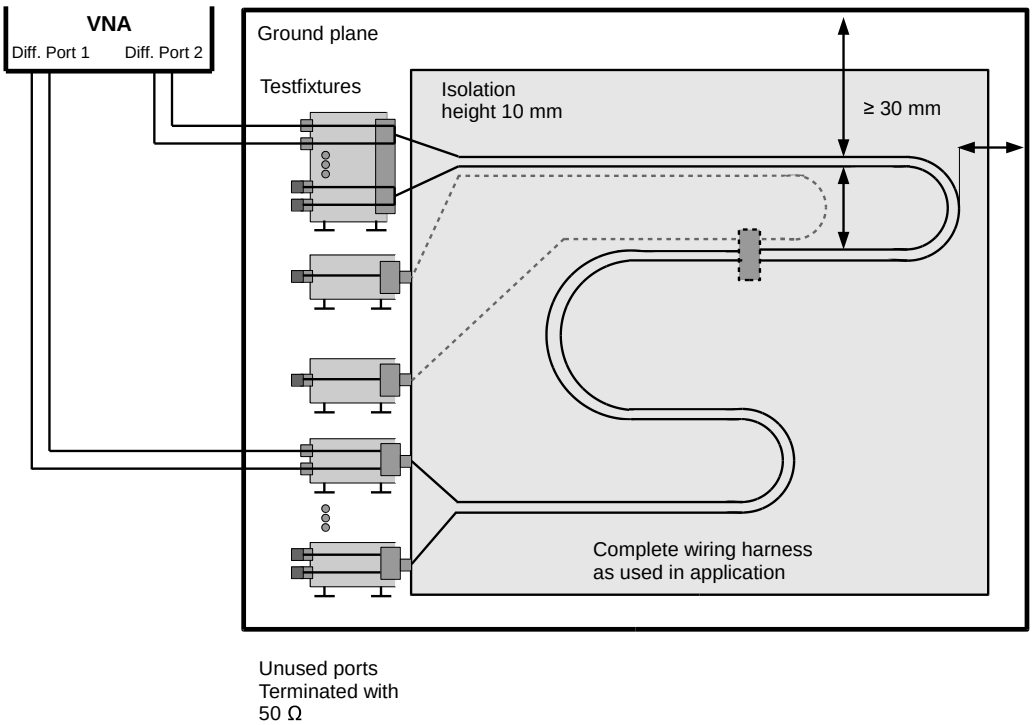

Figure 5.2.2-1: Wiring harness measurement setup for AFEXT, AFEXTDC, AFEXTDS and THRU

Figure 5.2.2-1 shows the differential port 1 of the VNA connected to the far end side and port 2 connected to the near end side of the wiring harness, allowing measuring far end crosstalk parameters AFEXT, AFEXTDC and AFEXTDS and the through connection (THRU).

The measurement of the THRU connection for each channel provides the insertion loss, return loss and mode conversion in context of the Environmental System. The insertion loss is also used to calculate PSAACRF.

Figure 5.2.2-2 shows port 1 and port 2 of the VNA connected to the near end side of the wiring harness to measure alien near end crosstalk parameters ANEXT, ANEXTDC and ANEXTDS.

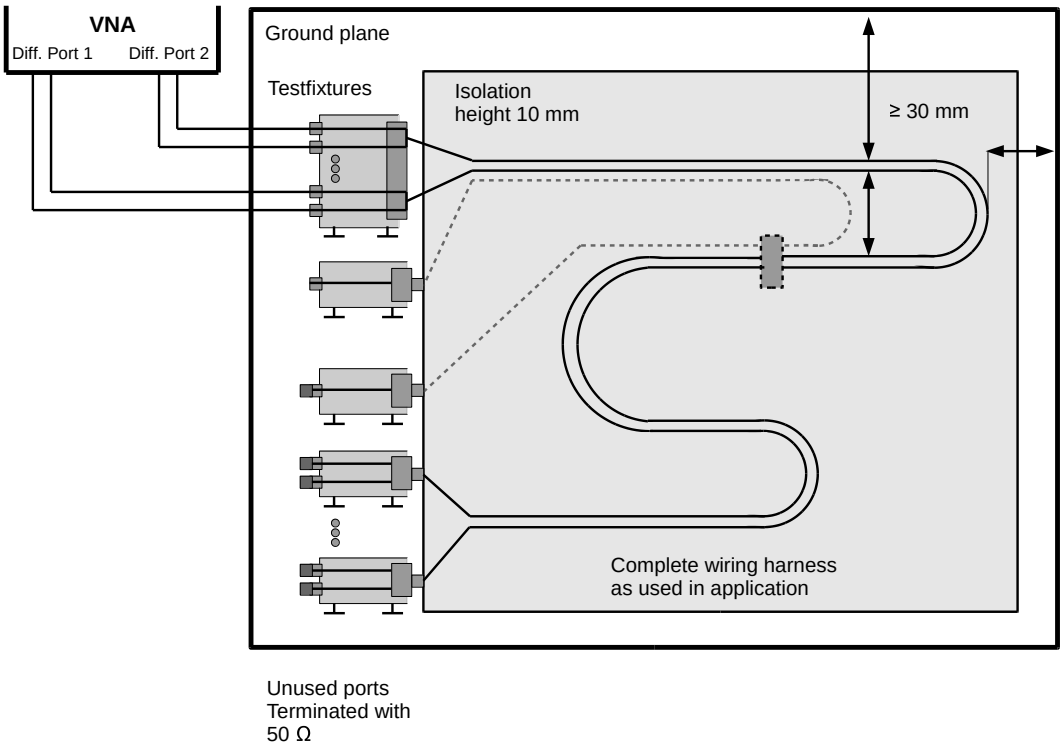

Figure 5.2.2-2: Wiring harness measurement setup for ANEXT, ANEXTDC and ANEXTDS

The measurement needs to be repeated for every port combination of the wiring harness. For each port, the power sum crosstalk can be calculated as the sum of crosstalk introduced by each neighbouring port. Equations how to calculate the power-sum crosstalk from individual transmission measurements are given in Chapter 3. Each port to be used with 1000BASE-T1 shall comply with the specified alien crosstalk limits in Section 6.2.3.

Beside the connectors and cable construction, the coupling parameter in a UTP cable harness depend significantly on the alignment and distance of the individual cables in the bundle to each other. Specific cable component requirements for these ES parameters are not given for this reason. However, Annex A.3 describes a method on informative base which can be used to characterize the coupling parameter between two cable pieces outside a wiring harness. This method allows to measure the crosstalk and cross conversion coupling parameters between two cables without the influence of connectors and variations of the arrangement within a cable bundle. It can be used as a tool to determine suitable cable constructions and design rules for achieving the ES parameter requirements in specific cable harness assemblies.

6 Electrical Requirements

6.1 Basic Requirements for Standalone Communication Channel (SCC)

This section specifies the channel and component requirements in context of the Standalone Communication Channel without the coupling parameters to neighbour wires.

6.1.1 Requirements for Connectors (SCC Context)

Test Parameter		Requirement
CIDM	Z_{RF}	100 Ω ± 5 % (at 500 ps rise time)
Propagation Delay	t_d	$\leq 667\ ps$ $2 \leq f \leq 600$, frequency *f* in MHz Port reference impedances: 100 Ω (DM), 25 Ω (CM)
IL	S_{dd21}	$\leq \left(0.01\sqrt{f}\right) dB$ $1 \leq f \leq 600$, frequency *f* in MHz Port reference impedances: 100 Ω (DM), 25 Ω (CM)
RL	S_{dd11}, S_{dd22}	$\geq \begin{pmatrix} 38 & 1 \leq f < 75 \\ 20 - 20\log\left(f/600\right) & 75 \leq f \leq 600 \end{pmatrix} dB$ $1 \leq f \leq 600$, frequency *f* in MHz Port reference impedances: 100 Ω (DM), 25 Ω (CM)
LCL LCTL	S_{dc11}, S_{dc22} S_{dc21}, S_{dc12}	$\geq \begin{pmatrix} 55 & 10 \leq f \leq 80 \\ 77 - 11.51\log(f) & 80 < f \leq 600 \end{pmatrix} dB$ $10 \leq f \leq 600$, frequency *f* in MHz Port reference impedances: 100 Ω (DM), 25 Ω (CM)

Table 6.1.1-1: Electrical limits for connectors (SCC context)

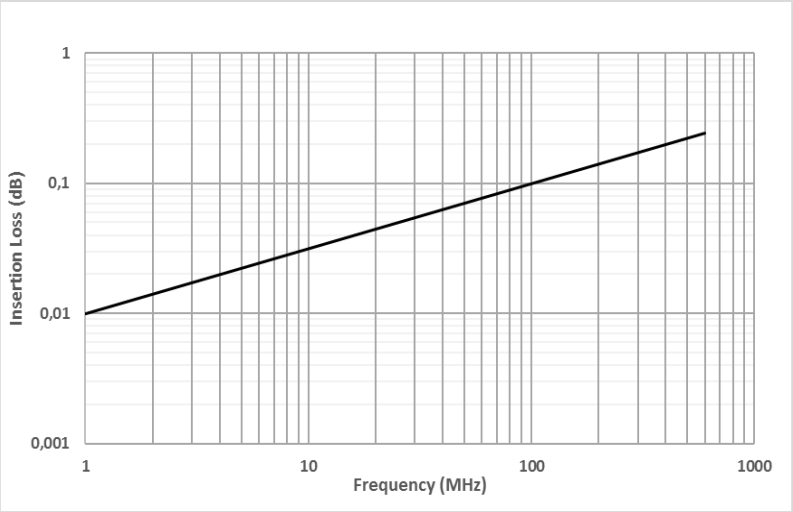

Figure 6.1.1-1: Insertion loss limit for connectors

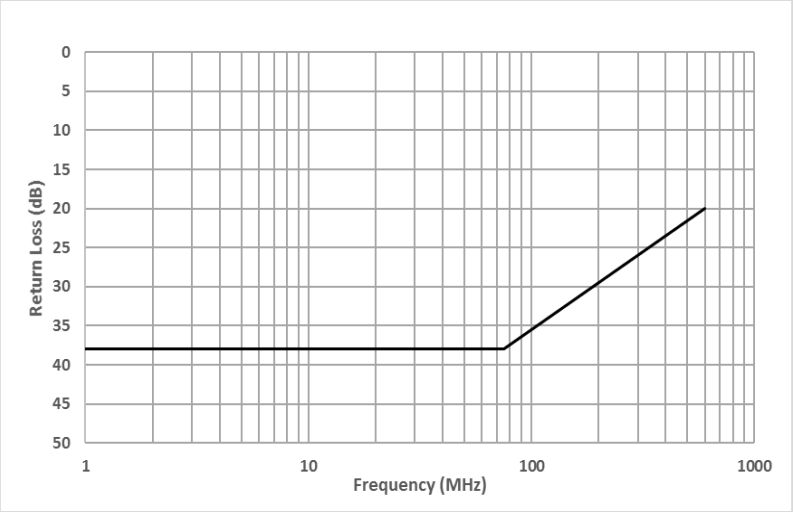

Figure 6.1.1-2: Return loss limit for connectors

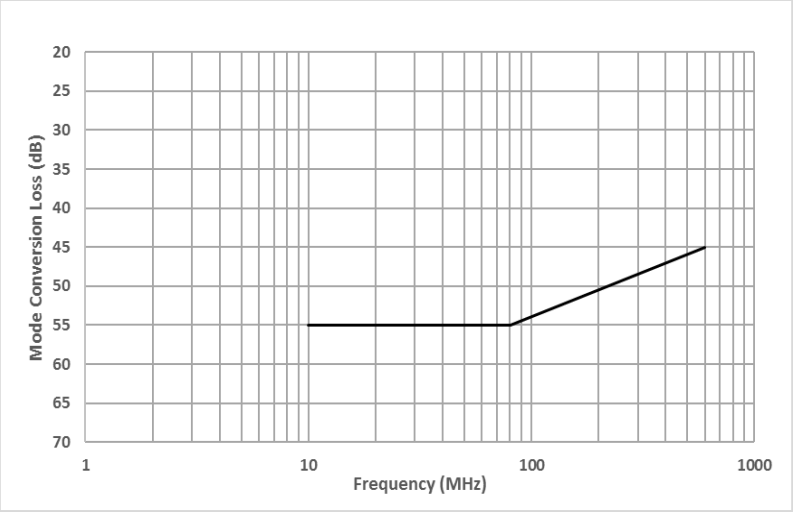

Figure 6.1.1-3: LCL / LCTL limit for connectors

6.1.2 Requirements for Cables (SCC Context)

Test Parameter		Requirement
CIDM	Z_{RF}	100 Ω ± 5 % (at 500 ps rise time)
Propagation Delay	t_d	<u>For use in SCC with maximum length of 15m</u> $\leq 6\ ns/m$ <u>For use in SCC with maximum length of 10m</u> $\leq 9\ ns/m$ $2 \leq f \leq 600$, frequency *f* in MHz Port reference impedances: 100 Ω (DM), 200 Ω (CM)
IL	S_{dd21}	<u>For use in SCC with maximum length of 15 m</u> $\leq \frac{1}{15}\left(0.0023f + 0.5907\sqrt{f} - 6*0.01\sqrt{f} + 0.0639/\sqrt{f}\right) dB/m$ <u>For use in SCC with maximum length of 10 m</u> $\leq \frac{1}{10}\left(0.0023f + 0.5907\sqrt{f} - 6*0.01\sqrt{f} + 0.0639/\sqrt{f}\right) dB/m$ $1 \leq f \leq 600$, frequency *f* in MHz Port reference impedances: 100 Ω (DM), 200 Ω (CM)
RL	S_{dd11}, S_{dd22}	$\geq \begin{pmatrix} 22 & 1 \leq f < 10 \\ 27 - 5\log f & 10 \leq f < 40 \\ 19 & 40 \leq f < 130 \\ 40 - 10\log f & 130 \leq f < 400 \\ 14 & 400 \leq f \leq 600 \end{pmatrix} dB$ $1 \leq f \leq 600$, frequency *f* in MHz Port reference impedances: 100 Ω (DM), 200 Ω (CM)
LCL LCTL	S_{dc11}, S_{dc22} S_{dc21}, S_{dc12}	$\geq \begin{pmatrix} 55 & 10 \leq f \leq 80 \\ 77 - 11.51\log(f) & 80 < f \leq 600 \end{pmatrix} dB$ $10 \leq f \leq 600$, frequency *f* in MHz Port reference impedances: 100 Ω (DM), 200 Ω (CM)

Table 6.1.2-1: Electrical limits for cables (SCC context)

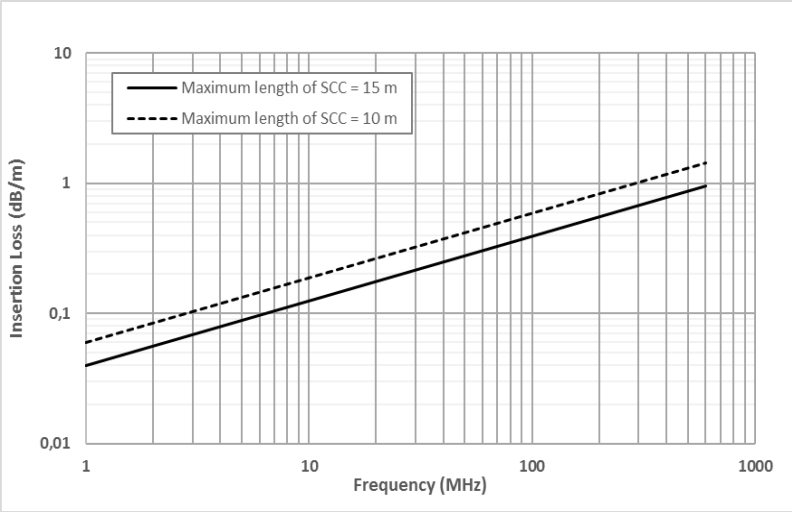

Figure 6.1.2-1: Insertion loss limit for cables

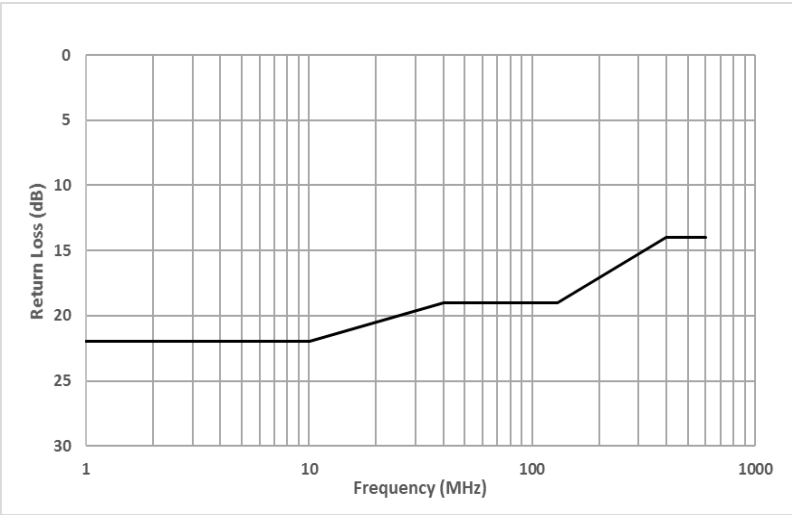

Figure 6.1.2-2: Return loss limit for cables

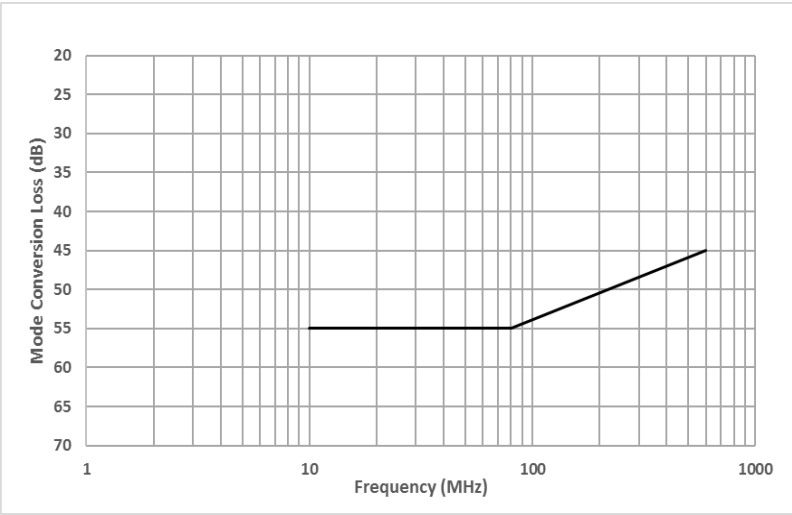

Figure 6.1.2-3: LCL / LCTL limit for cables

6.1.3 Requirements for Whole Communication Channel (SCC Context)

Test Parameter		Requirement
CIDM	Z_{RF}	Informative parameter only (not required) 100 Ω ± 10 % (at 500 ps rise time)
Propagation Delay	t_d	$\leq 94\ ns$ $2 \leq f \leq 600$, frequency *f* in MHz Port reference impedances: 100 Ω (DM), 200 Ω (CM)
IL	S_{dd21}	$\leq \left(0.0023 f + 0.5907\sqrt{f} + 0.0639 / \sqrt{f} \right) dB$ $1 \leq f \leq 600$, frequency *f* in MHz Port reference impedances: 100 Ω (DM), 200 Ω (CM)
RL	S_{dd11}, S_{dd22}	$\geq \begin{pmatrix} 19 & 1 \leq f < 10 \\ 24 - 5\log f & 10 \leq f < 40 \\ 16 & 40 \leq f < 130 \\ 37 - 10\log f & 130 \leq f < 400 \\ 11 & 400 \leq f \leq 600 \end{pmatrix} dB$ $1 \leq f \leq 600$, frequency *f* in MHz Port reference impedances: 100 Ω (DM), 200 Ω (CM)
LCL LCTL	S_{dc11}, S_{dc22} S_{dc21}, S_{dc12}	$\geq \begin{pmatrix} 50 & 10 \leq f \leq 80 \\ 72 - 11.51\log(f) & 80 < f \leq 600 \end{pmatrix} dB$ $10 \leq f \leq 600$, frequency *f* in MHz Port reference impedances: 100 Ω (DM), 200 Ω (CM)

Table 6.1.3-1: Electrical limits for Whole Communication Channel (SCC context)

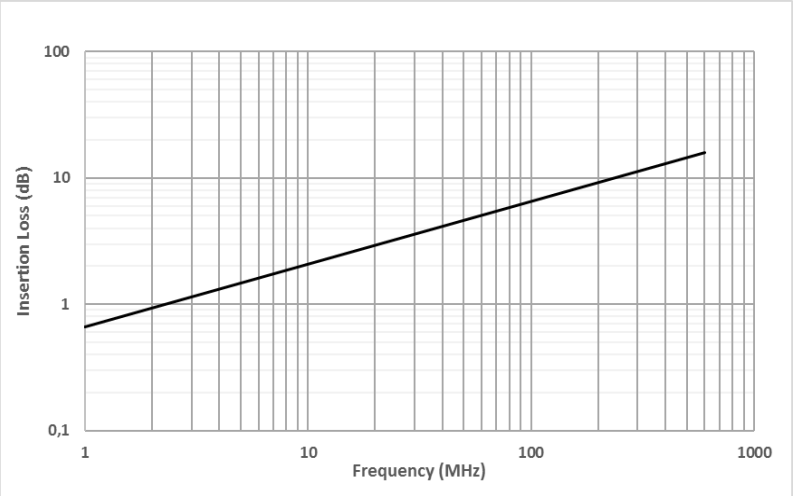

Figure 6.1.3-1: Insertion loss limit for Whole Communication Channel

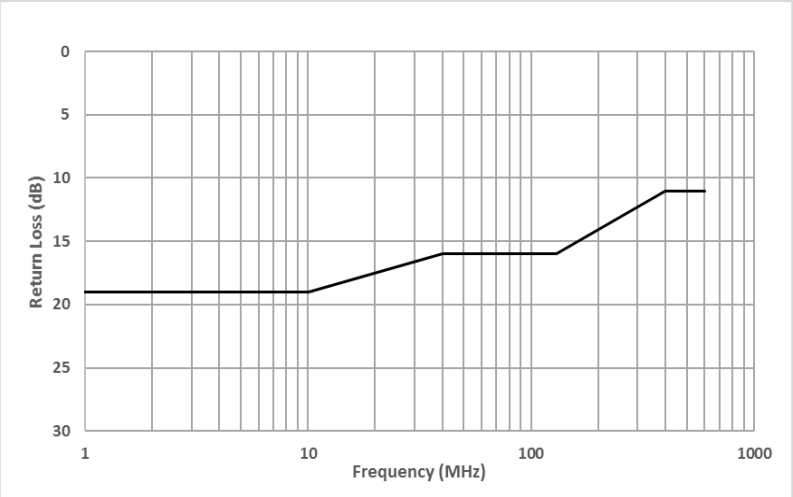

Figure 6.1.3-2: Return loss limit for Whole Communication Channel

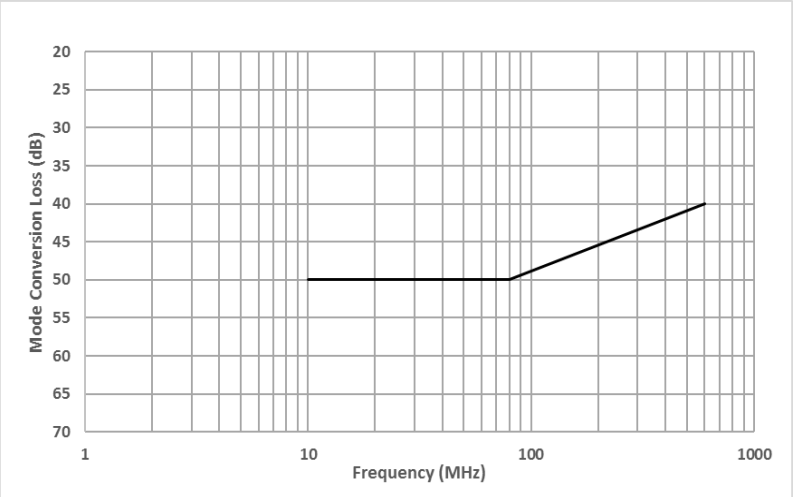

Figure 6.1.3-3: LCL / LCTL limit for Whole Communication Channel

6.2 Additional Requirements for Alien Coupling within Environmental System (ES)

This section specifies the coupling parameter requirements for components and channels.

6.2.1 Requirements for Connectors (ES Context)

The test parameters and limits according to Table 6.2.1-1 are required for multi-pair connectors additionally to the parameters in Section 6.1.1.

Test Parameter		Requirement
PSANEXT Loss	S_{dd31}, S_{ddyx}	$\geq \begin{pmatrix} 57-10\log\left(f/100\right) & 1 \leq f \leq 100 \\ 57-15\log\left(f/100\right)-6\left(f-100/400\right) & 100 < f \leq 600 \end{pmatrix} dB$ $1 \leq f \leq 600$, frequency *f* in MHz Port reference impedances: 100 Ω (DM), 25 Ω (CM)
PSAFEXT Loss	S_{dd41}, S_{ddyx}	$\geq \left(46.67-20\log\left(f/100\right)\right) dB$ $1 \leq f \leq 600$, frequency *f* in MHz Port reference impedances: 100 Ω (DM), 25 Ω (CM)
AFEXTDC Loss AFEXTDS Loss	S_{dc41}, S_{dcyx} S_{ds45}, S_{dsyx}	$\geq \begin{pmatrix} 50 & 10 \leq f \leq 80 \\ 72-11.51\log(f) & 80 < f \leq 600 \end{pmatrix} dB$ $10 \leq f \leq 600$, frequency *f* in MHz Port reference impedances: 100 Ω (DM), 25 Ω (CM)

Table 6.2.1-1: Electrical limits for connectors (ES context)

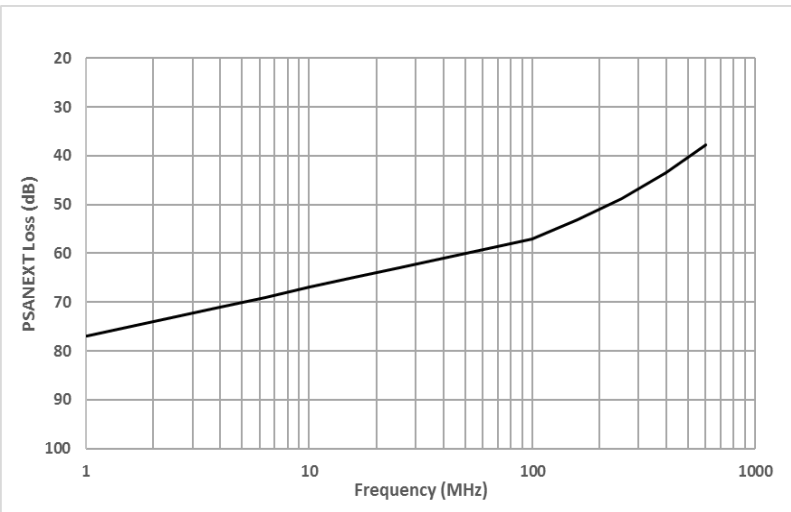

Figure 6.2.1-1: PSANEXT loss limit for connectors

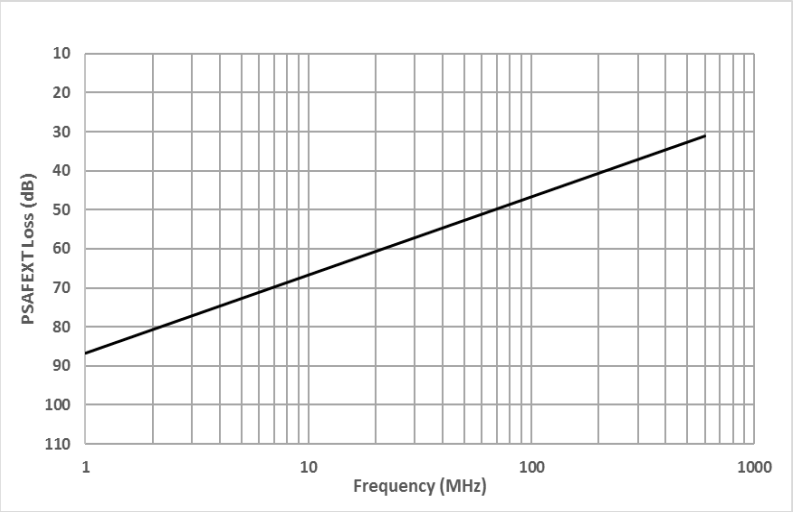

Figure 6.2.1-2: PSAFEXT loss limit for connectors

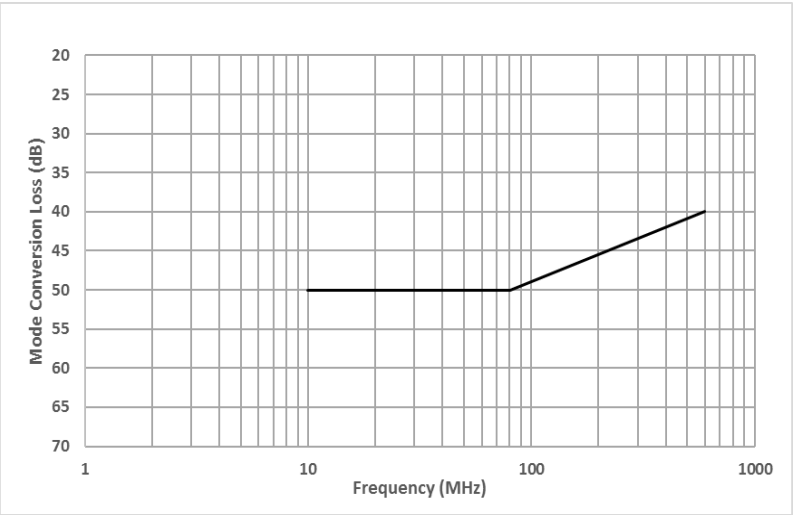

Figure 6.2.1-3: AFEXTDC / AFEXTDS loss limit for connectors

6.2.2 Requirements for Cables (ES Context) – Informative

There are no normative requirements for ES coupling parameter of cables as components. A measurement methodology and informative limits are given in Annex A.3.

6.2.3 Requirements for Whole Communication Channel (ES Context)

The test parameters and limits according to Table 6.2.3-1 are required for cable harnesses additionally to the insertion loss and return loss parameters in Section 6.1.3.

Test Parameter		Requirement
PSANEXT Loss	S_{dd31}, S_{ddyx}	$\geq \begin{pmatrix} 54-10\log\left(f/100\right) & 1 \leq f \leq 100 \\ 54-15\log\left(f/100\right)-6\left(f-100/400\right) & 100 < f \leq 600 \end{pmatrix} dB$ $1 \leq f \leq 600$, frequency *f* in MHz Port reference impedances: 100 Ω (DM), 200 Ω (CM)
PSAACRF	S_{dd41}, S_{ddyx}	$\geq \left(43.67-20\log\left(f/100\right)\right) dB$ [3] $1 \leq f \leq 600$, frequency *f* in MHz Port reference impedances: 100 Ω (DM), 200 Ω (CM)
AFEXTDC Loss AFEXTDS Loss	S_{dc41}, S_{dcyx} S_{ds45}, S_{dsyx}	$\geq \begin{pmatrix} 50 & 10 \leq f \leq 80 \\ 72-11.51\log(f) & 80 < f \leq 600 \end{pmatrix} dB$ $10 \leq f \leq 600$, frequency *f* in MHz Port reference impedances: 100 Ω (DM), 200 Ω (CM)

Table 6.2.3-1: Electrical limits for WCC (ES context)

[3] The equation for PSAACRF is the simplified expression of the same limit as defined in [1].

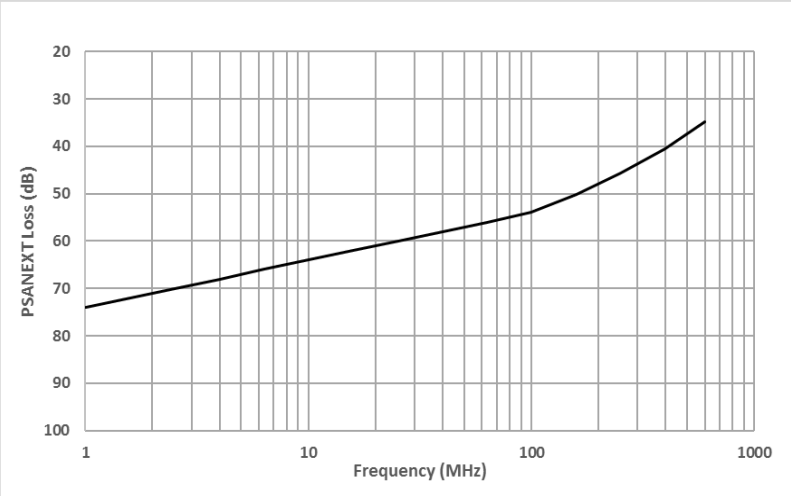

Figure 6.2.3-1: PSANEXT loss limit for WCC

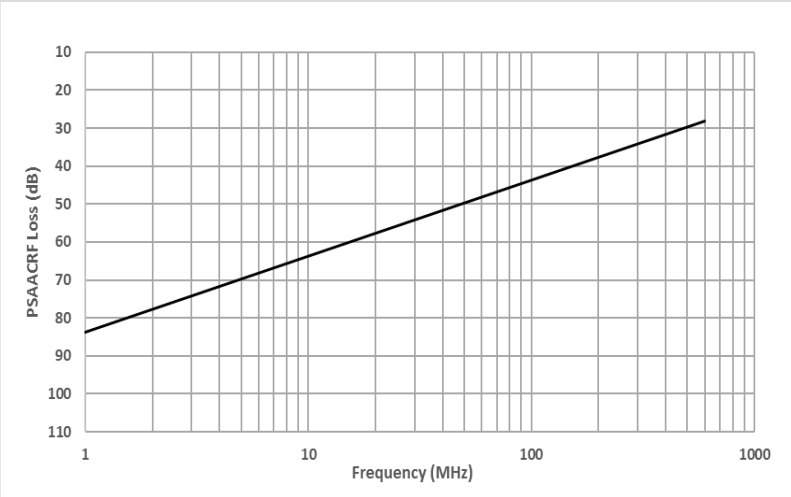

Figure 6.2.3-2: PSAACRF loss limit for WCC

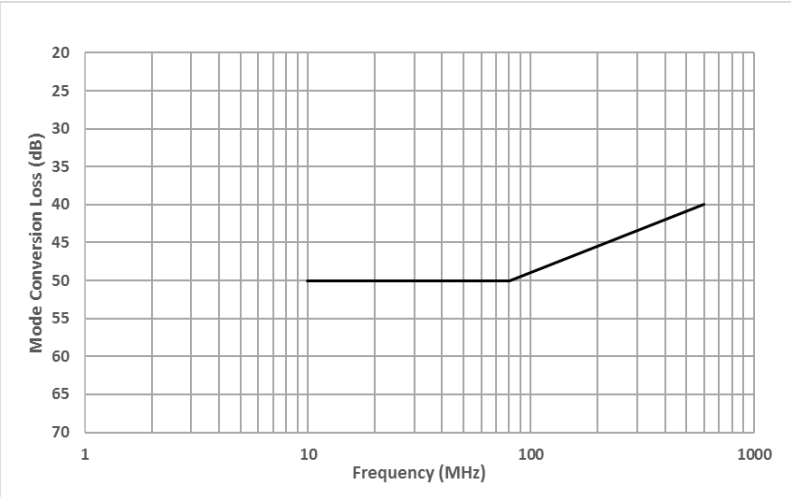

Figure 6.2.3-3: AFEXTDC / AFEXTDS loss limit for WCC

7 MDI Test Head

7.1 General MDI Test Head Description

This chapter describes the electrical performance requirements and the basic design guidelines of a MDI Test Head. The test head is a test fixture allowing to measure S-parameter, i.e. return loss and mode conversion, of the MDI circuit implementation in an ECU. The measurements are performed from outside the ECU into the MDI connector. Such measurements are part of the ECU compliance test procedures and not in scope of this document. The test head shall consist of plug connector terminal, i.e. cable side connector interface that can be mated to the ECU MDI connector. This plug connector terminal shall be connected to RF connectors, e.g. SMA type, for attaching the VNA test cables on the opposite side of the test head.

To achieve a high degree of reliability of measurement results the use of a specific MDI Test Head (Figure 7.1-1) for the connection to the ECU connector MDI pins is required. The MDI Test Head shall fulfill the requirements in Chapter 4.4 (Measurement Fixtures). The ground terminals or ground pin(s) of the ECU shall be directly connected to the ground plane of the MDI Test Head in order to establish a low impedance reference for the RF measurements. The detailed representation of this ground connection depends on the specific connector and ECU design and needs to be defined individually for this reason. The reference ground and its connections to the ECU and to the MDI Test Head should be arranged symmetrically to the signal wire pair. If possible, the original harness connector shall be used. It shall be a fixed part of the MDI Test Head. The calibration reference plane is defined at the coax connectors on the MDI Test Head.

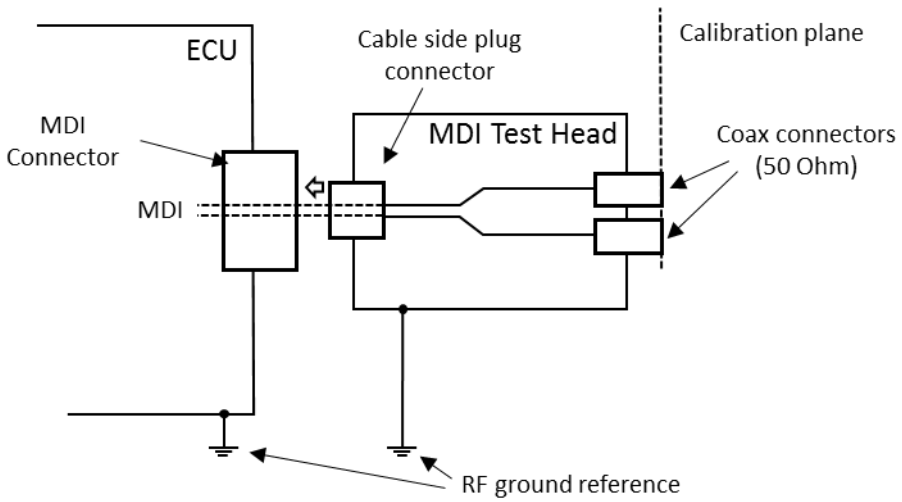

Figure 7.1-1: Example for MDI Test Head

7.2 Characterization of MDI Test Head and Limits

The characterization of the MDI Test Head is done by TDR impedance measurement and VNA mode conversion measurement similar to the fixture characterization in Chapter 4.4.1 and Chapter 4.4.2. The MDI Test Head needs to be measured including the cable side plug connector. The cable side plug connector is in open condition, i.e. not mated to its counter part. The characteristic impedance differential mode of the MDI Test Head shall be within 100 Ω ± 5 % at a rise time of 50 ps. An impedance tolerance of ± 10 % at the location of the coaxial connectors is permitted if the 5 % limit is exceeded no longer than 120 ps round trip time or 60 ps propagation time (see Figure 7.2-1).

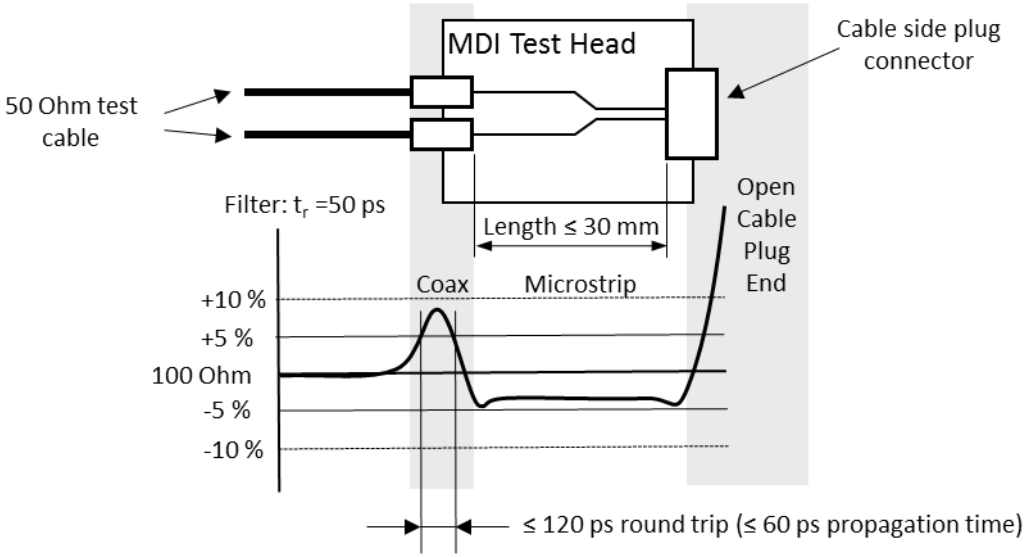

Figure 7.2-1: Characteristic impedance of MDI Test Head

The maximum trace length on the MDI Test Head shall not exceed 30 mm to ensure sufficient return loss. Longer trace lengths are permitted in case of design constraints if the following requirements are met to avoid inaccurate return loss results:

- Impedance tolerance of the traces smaller than ± 5 %

or

- Removing the Test Head traces by de-embedding techniques or by shifting the calibration plane to the leads of the cable side plug connector; the detailed description of such techniques is not scope of this document. The correct application of these methods needs to be demonstrated and documented. The balance requirements in Table 7.2-1 shall still be met after applying the correction methods mentioned above.

The mode conversion of the MDI Test Head is characterized by measuring the LCL (Sdc_{11}) with the cable side plug in open condition (see Figure 7.2-2). The mixed mode port reference impedances of the network analyzer shall be set to 100 Ohm for differential mode and to 25 Ohm for common mode. Correction features

of the VNA like port extension or fixture compensation may optionally be used to improve the fixture balance. The correct application of such methods shall be demonstrated.

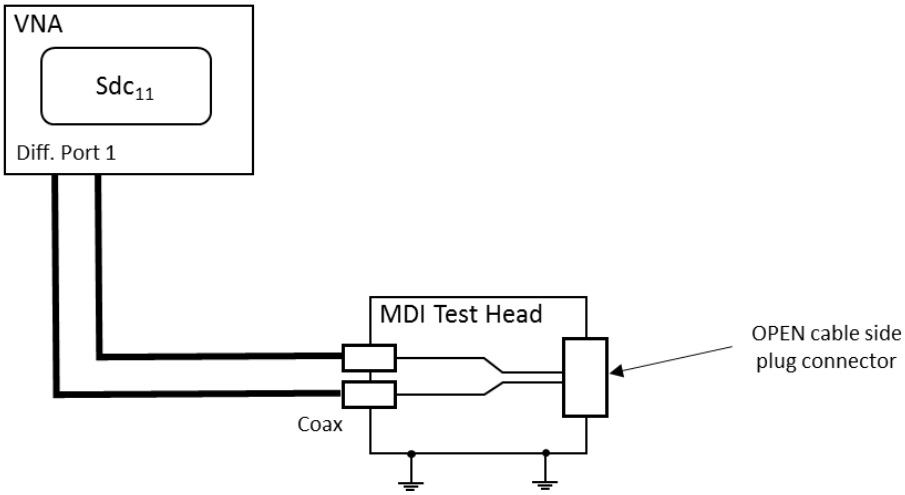

Figure 7.2-2: Mode conversion measurement setup for MDI Test Head

The mode conversion parameter LCL (Sdc_{11}) of the MDI Test Head shall comply with the requirements given in Table 7.2-1.

Test Parameter		Requirement
LCL	Sdc_{11}	$\geq \begin{pmatrix} 61 & 10 \leq f \leq 80 \\ 83 - 11.51\,log(f) & 80 < f \leq 600 \end{pmatrix} dB$ $10 \leq f \leq 600$, frequency f in MHz Port reference impedances: 100 Ω (DM), 25 Ω (CM)

Table 7.2-1: MDI Test Head mode conversion requirement

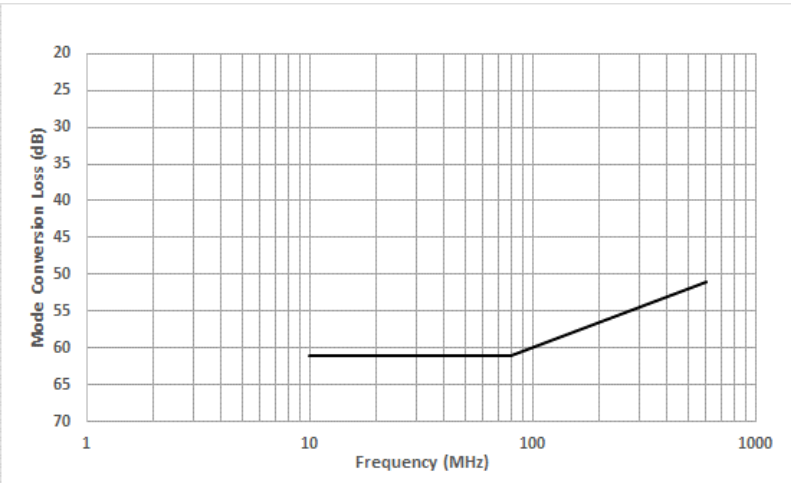

Figure 7.2-3: Mode conversion requirement for MDI Test Head

Annex A – Additional Measurement Setup Definitions

A.1 Example for Measurement Fixtures

The connector measurement fixture shall provide an optimal connection of connector terminals with the measurement equipment. In order to avoid parasitic effects at the test fixture a printed circuit board should be used with impedance controlled traces (which should be as short as possible) and RF board connectors. An example of a PCB based measurement fixture for a single port connector is given in Figure A.1-1.

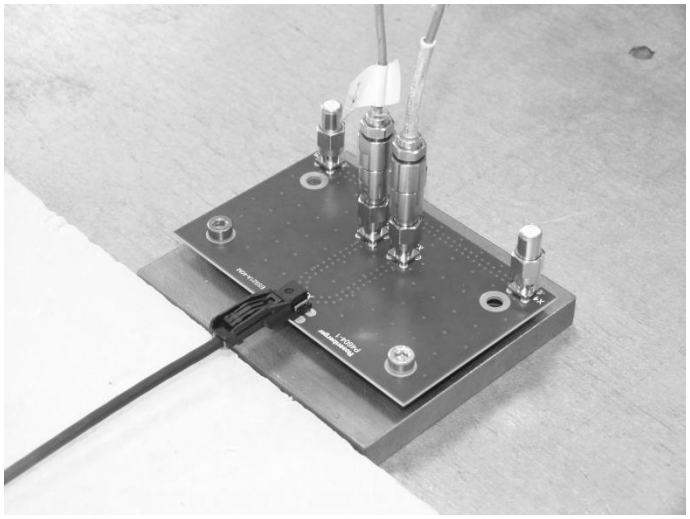

Figure A.1-1: PCB based measurement fixture

An example of a PCB based multiport connector measurement fixture is shown in Figure A.1-2.

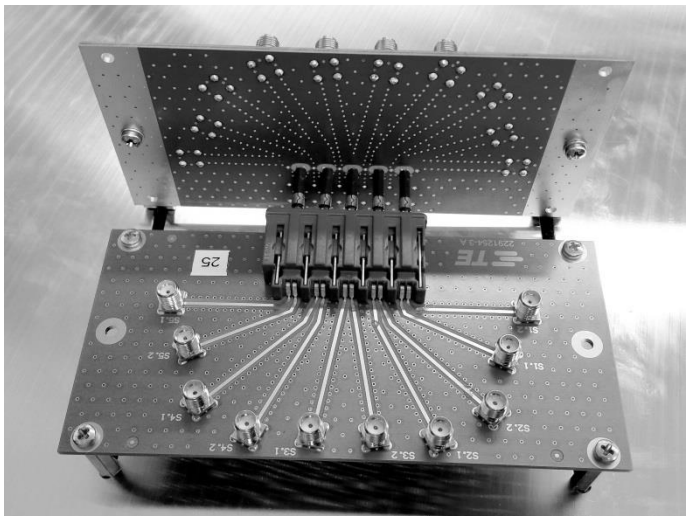

Figure A.1-2: PCB based multiport connector measurement fixture

Coaxial connector based direct measurement fixtures can be used as an alternative. They are especially suitable to measure cables. An example for such measurement fixture is given in Figure A.1-3.

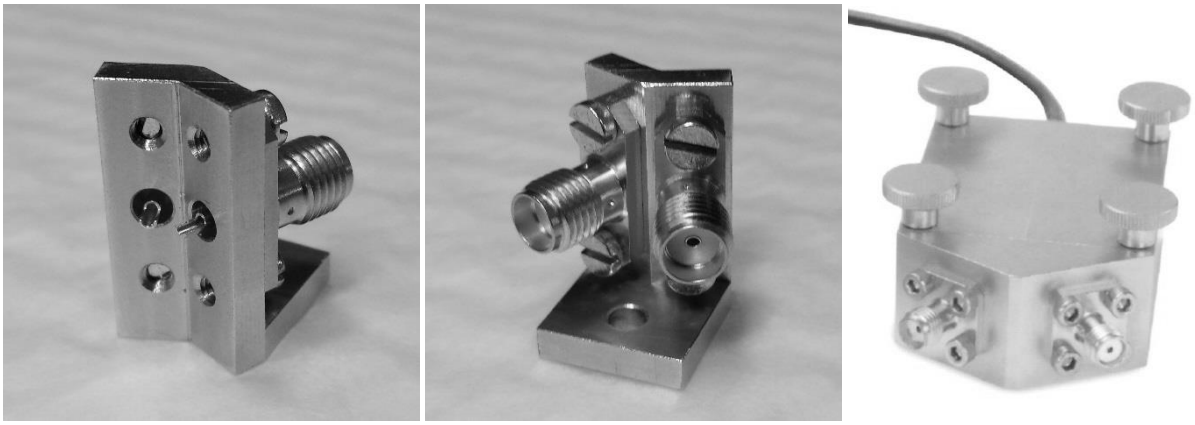

Figure A.1-3: Coaxial connector based measurement fixtures as example

A.2 Example for Cable Arrangement

The cable under test should be loose wound on a conducting drum with b = 10 mm isolation ($\varepsilon_r \leq 1.4$) at drum outside. A loose winding of the cable under test (CUT) is required to avoid a mechanical impact to the cable during the test at low and high temperatures. Each winding should be separated by a minimum of a = 30 mm which will eliminate inter-winding coupling for unscreened cables. The ground reference of the used measurement fixture for connecting the cable under test with the measurement equipment is shorted with low impedance to the conducting drum at both ends.

The distance of windings at the drum arrangement is calculated as follows:

$$a = 3 * b$$

with: a distance between single windings of CUT

b thickness of isolation (equal to height above ground reference plane) = 10 mm

An example for drum with loose wound unscreened cable is given in Figure A.2-1.

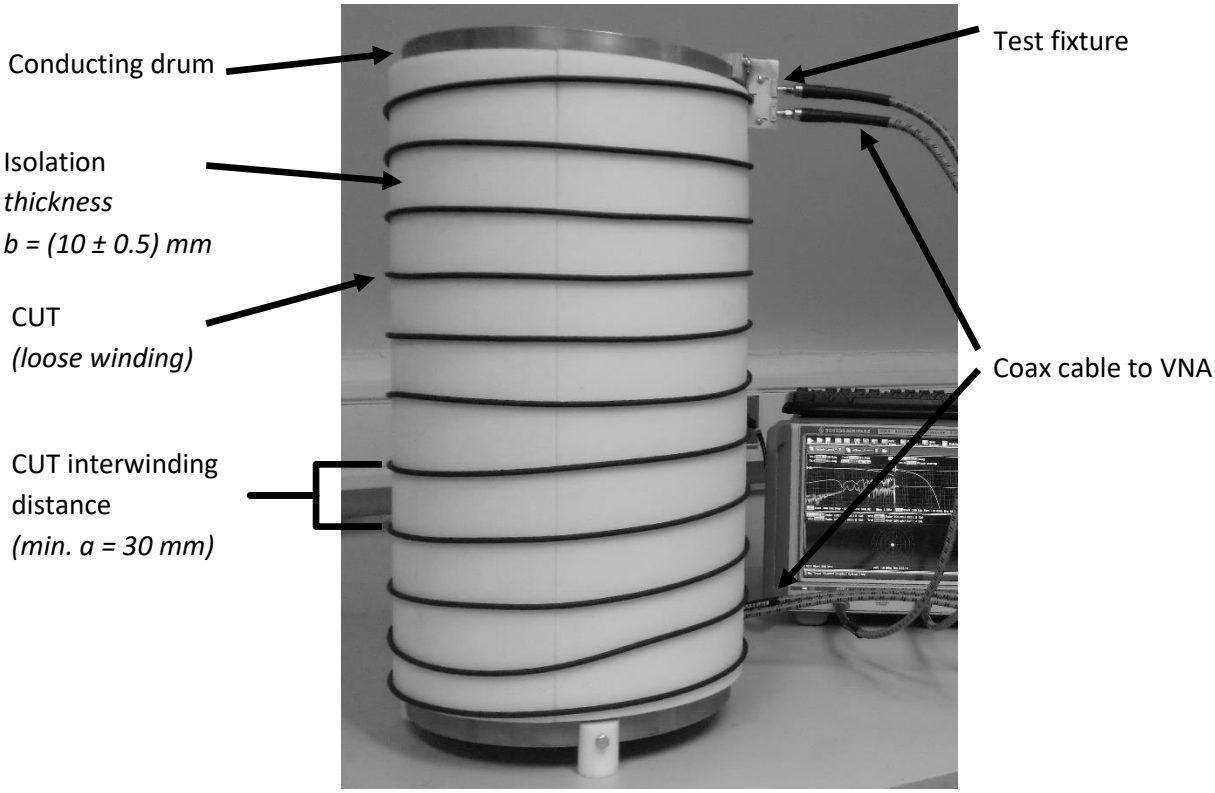

Figure A.2-1: Example for cable arrangement used for S-parameter and TDR measurements

A.3 Cable Crosstalk Measurement – Informative

This chapter defines a setup and procedures to measure the crosstalk between two cables on component level without the influence of connectors and in a reproducible way. When crosstalk is measured within a wiring harness as described in Chapter 5.2.2, the results will be a sum of the connector and of the cable crosstalk in an application specific setup. Additionally, the cable bundling, the position of the cables within the harness and manufacturing reproducibility will affect the measurement results.

To eliminate these influences, two cables are positioned in close proximity over a coupling length of 1 m as shown in Figure A.3-1. Both cables shall touch each other over the whole coupling length. The DUT shall be placed on dielectric insulation material ($\varepsilon_r < 1.4$) of 10 mm height over conducting ground plane. Ports that are not connected to the VNA shall be terminated at the coaxial ports of the measurement fixture with single ended 50 Ω. The measurement fixtures shall be grounded on both ends. As cross conversion crosstalk parameters are measured, the measurement fixtures need to fulfil the balance requirements defined in Chapter 4.4.2.

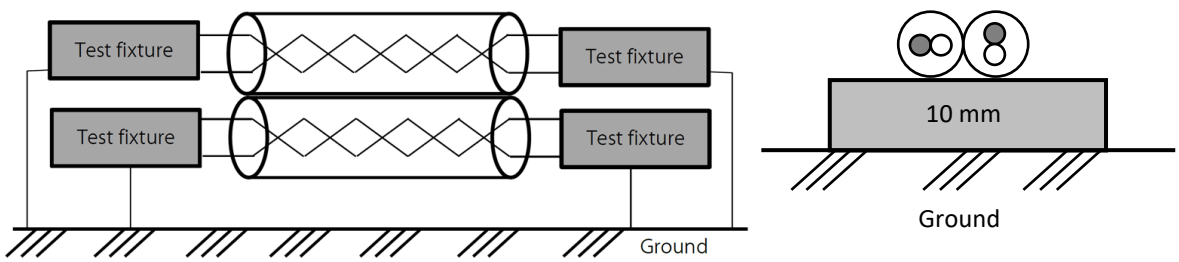

Figure A.3-1: Cable crosstalk measurement principle and orientation of differential pairs

The amount of differential crosstalk between unshielded twisted pair cables that are positioned in close proximity in parallel to each other significantly varies with the orientation of the pairs to each other. Figure A.3-1 shows the cross section of two cables whose differential pairs are oriented perpendicular to each other, resulting in a minimum in differential crosstalk. If both pairs of cores are parallel to each other, the differential crosstalk will be maximized. For example, shifting the position of one of the cables by a quarter of the twist length, the crosstalk will change from minimum to maximum.

To determine the maximum crosstalk within the two cables, one of the cables is fixed in its position while the other cable can be shifted in x-direction in parallel to the other cables as shown in Figure A.3-2. It is important that the cables are touching each other over the whole coupling length of 1 m. The ends of each cable are routed in right angle to the DUT to a measurement fixture. The cable length of these breakouts is limited to not more than 150 mm. As the fixed cable needs to be slightly longer, in order not to reduce the coupling length when the movable cable is shifted, the fixed cable is allowed to be 200 mm longer at maximum.

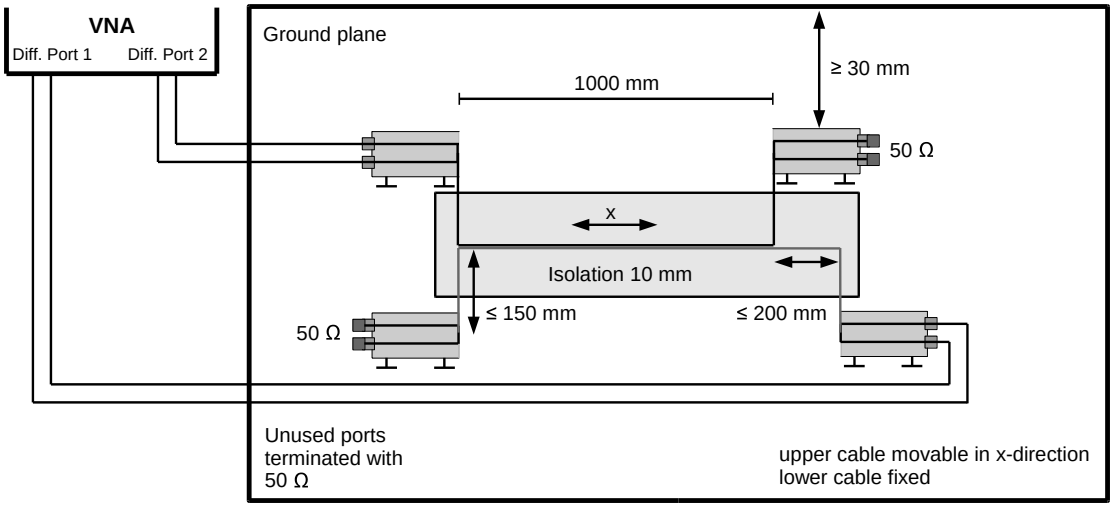

Figure A.3-2: Cable far-end crosstalk measurement setup

The overall shift of the cable is one twist length. The measurement is repeated in steps of 1 mm up to the twist length (e.g. 15 mm) to make sure the maximum in crosstalk is found and recorded. The same measurement shall also be carried out with the differential port 1 of the VNA connected to the near end measurement fixture to measure near end crosstalk as shown in Figure A.3-3.

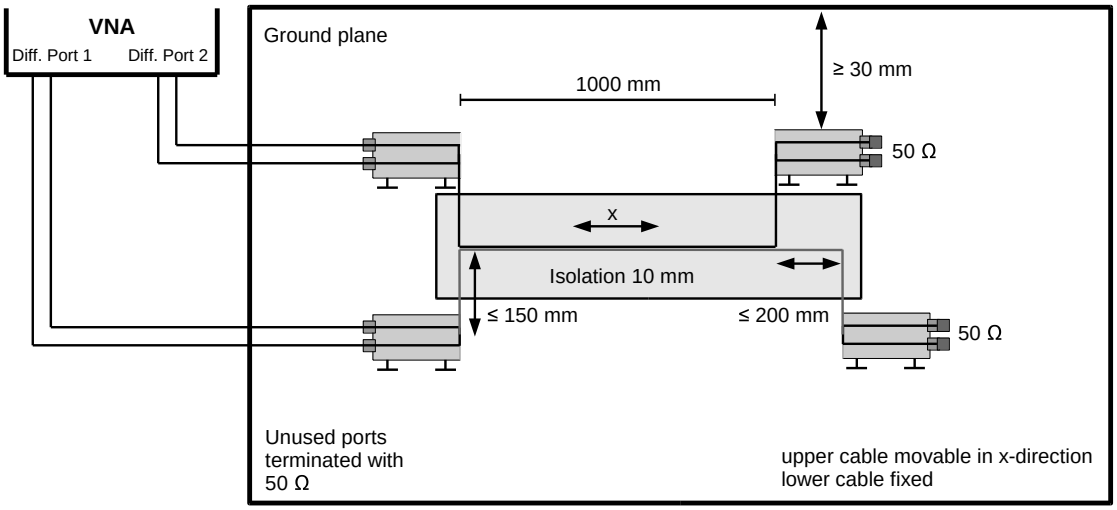

Figure A.3-3: Cable near-end crosstalk measurement setup

Table A.3-1 specifies informative alien coupling parameters of cable components within the environmental system which are applicable to the measurement method in this Section A.3.

Test Parameter		Requirement - Informative
ANEXT Loss	S_{dd31}, S_{ddyx}	$\geq \begin{pmatrix} 54+14-10\log\left(f/100\right) & 1 \leq f \leq 100 \\ 54+14-15\log\left(f/100\right)-6\left(f-100/400\right) & 100 < f \leq 600 \end{pmatrix} dB$ $1 \leq f \leq 600$, frequency *f* in MHz Port reference impedances: 100 Ω (DM), 200 Ω (CM)
AFEXT Loss	S_{dd41}, S_{ddyx}	$\geq \left(43.67+16-20\log\left(f/100\right)\right) dB$ $1 \leq f \leq 600$, frequency *f* in MHz Port reference impedances: 100 Ω (DM), 200 Ω (CM)
AFEXTDC Loss AFEXTDS Loss	S_{dc41}, S_{dcyx} S_{ds45}, S_{dsyx}	Not specified

Table A.3-1: Electrical limits for cables (ES context)

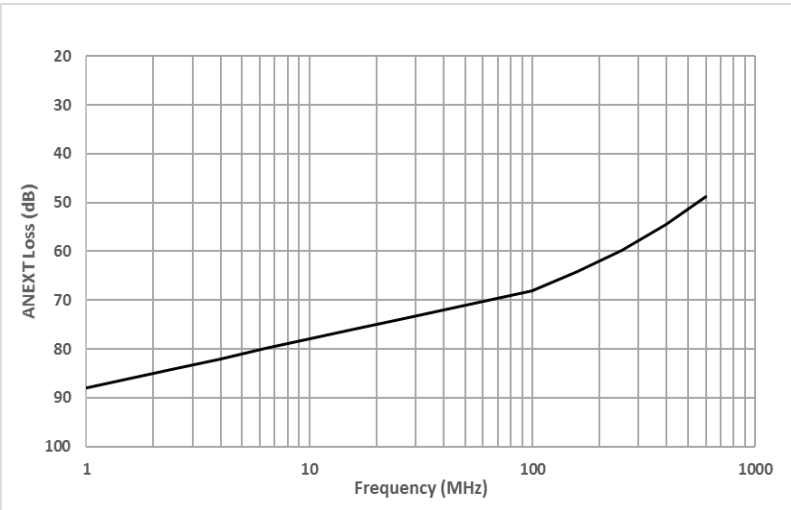

Figure A.3-4: Informative ANEXT loss limit for cables

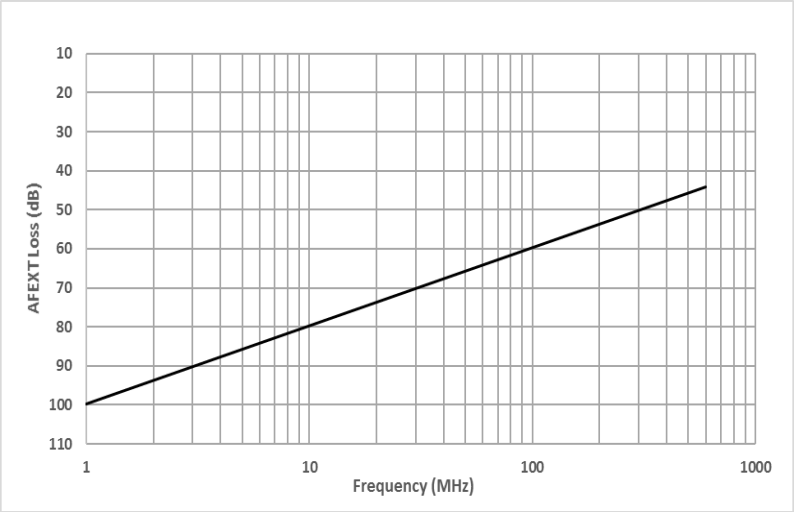

Figure A.3-5: Informative AFEXT loss limit for cables

A.4 Reference Communication Channel

The reference communication channel has got a length of 15 m, consisting of two PCB connectors and four inline connectors that are equally spaced in 3 m distance as shown in Figure A.4-1.

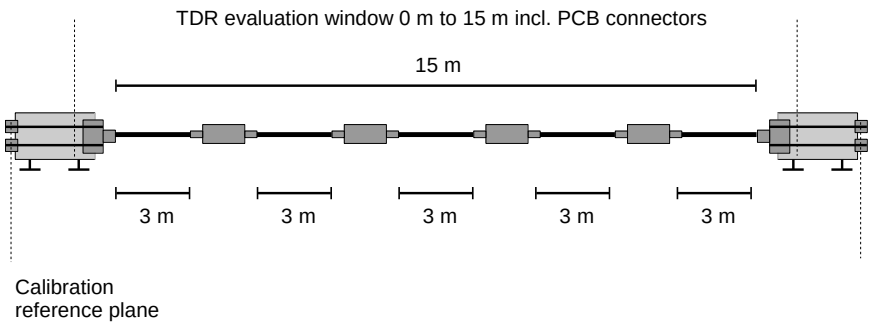

Figure A.4-1: Reference communication channel

This topology serves as common reference to compare different components in terms of their electrical properties and their influence on the whole communication channel. It also allows to compare the results of different test houses.

A.5 Reference Wiring Harness

The cable assembly as described in this chapter serves as common reference to compare different components in terms of their electrical properties in the context of a whole wiring harness. It also allows comparing the results of different test houses. The reference wiring harness was derived from a worst case camera application scenario. It consists of a bundle of five cables in a 4 around 1 configuration as shown in Figure A.5-1 and Figure A.5-2. The total cable length of the bundled part of the wiring harness is 5 m including two equally spaced inline connectors, resulting in 1.66 m length for each cable segment. One communication channel is extended by two segments of 1.5 m length including one additional inline connector. This extended channel is centered in the four around one cable bundle arrangement shown in Figure A.5-2.

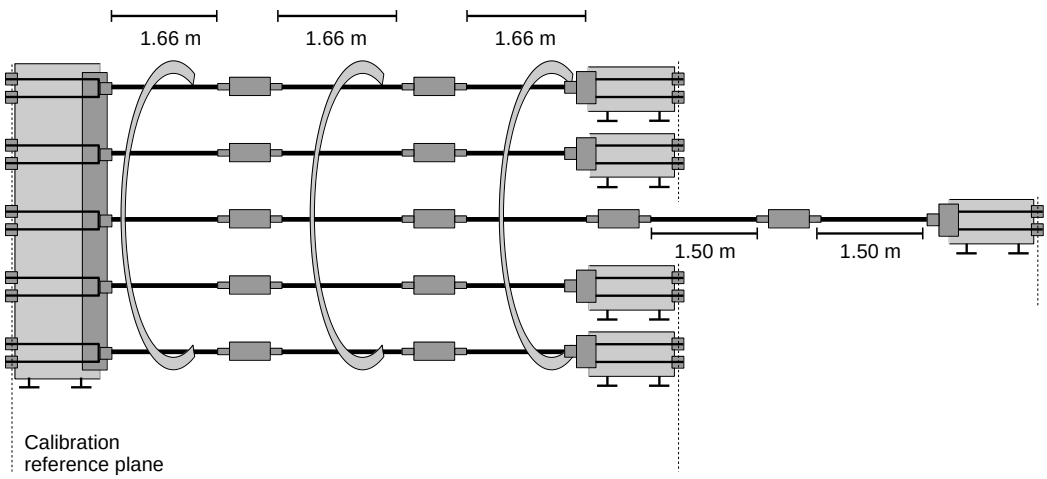

Figure A.5-1: Reference wiring harness cable bundling

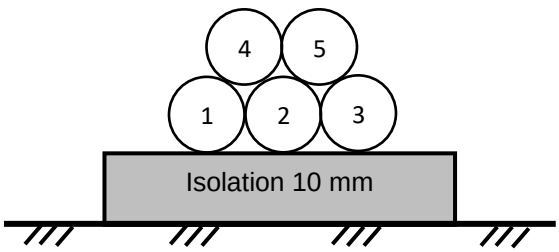

Figure A.5-2: Four around one cable bundling

To take into account the crosstalk within a multiport connector, as used in ECUs or switches, one side of the reference wiring harness is measured including a multiport connector. On the other side of the wiring harness the bundle usually splits up to connect to individual devices like cameras. Therefore, the far ends of the wiring harness are measured with single-port measurement fixtures.

The cable bundle shall be fixed to ensure adjacent cables are touching throughout the bundled length, as the differential crosstalk is highly dependent on the distance between cables. The cable bundle shall be fixed together at a maximum distance of 300 mm by means of dielectric fixation tools like adhesive tape or tailor-made dielectric clamps.

The length of the split-up of the wiring harness at the termination areas is limited to a maximum of 300 mm. The length of the split-up of the wiring harness at each side of the inline connectors is limited to a maximum of 100 mm. All ports of measurement fixtures that are not connected to the VNA but still part of the measurement setup, e.g. with the reference wiring harness, shall be terminated with 50 Ω single ended.

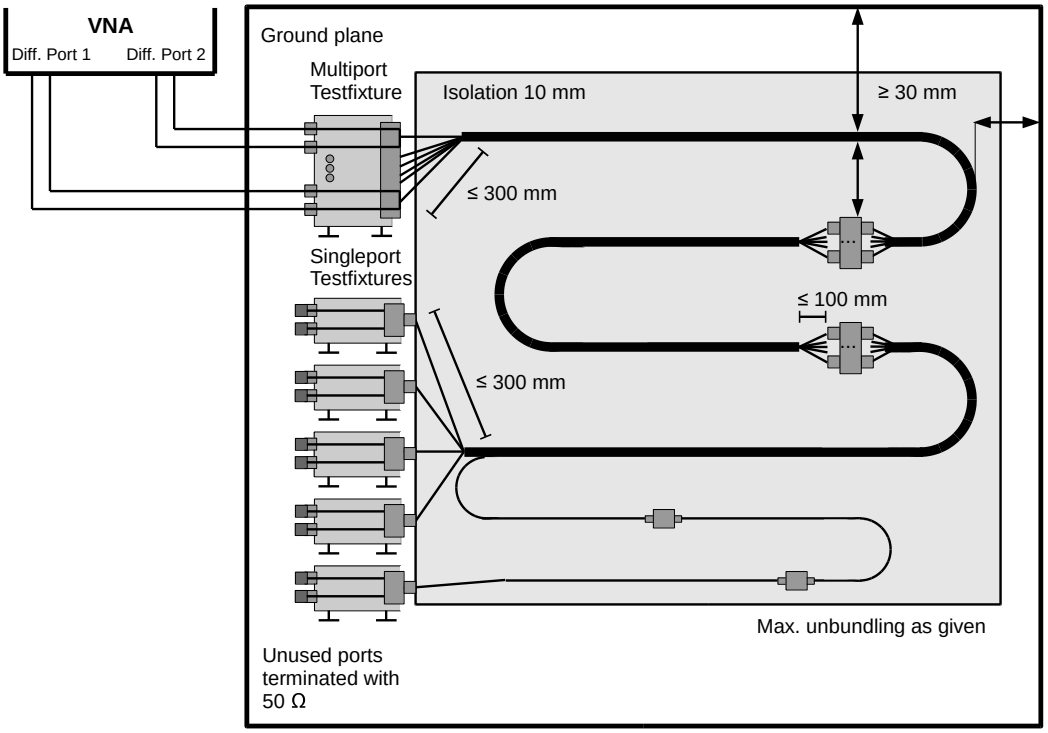

Figure A.5-3: Reference wiring harness near end crosstalk measurement (ANEXT)

Figure A.5-3 shows port 1 and port 2 of the VNA connected to the multiport measurement fixture to measure alien near end crosstalk parameters ANEXT. The measurement needs to be repeated for every pair of the reference wiring harness at the multiport measurement fixture.

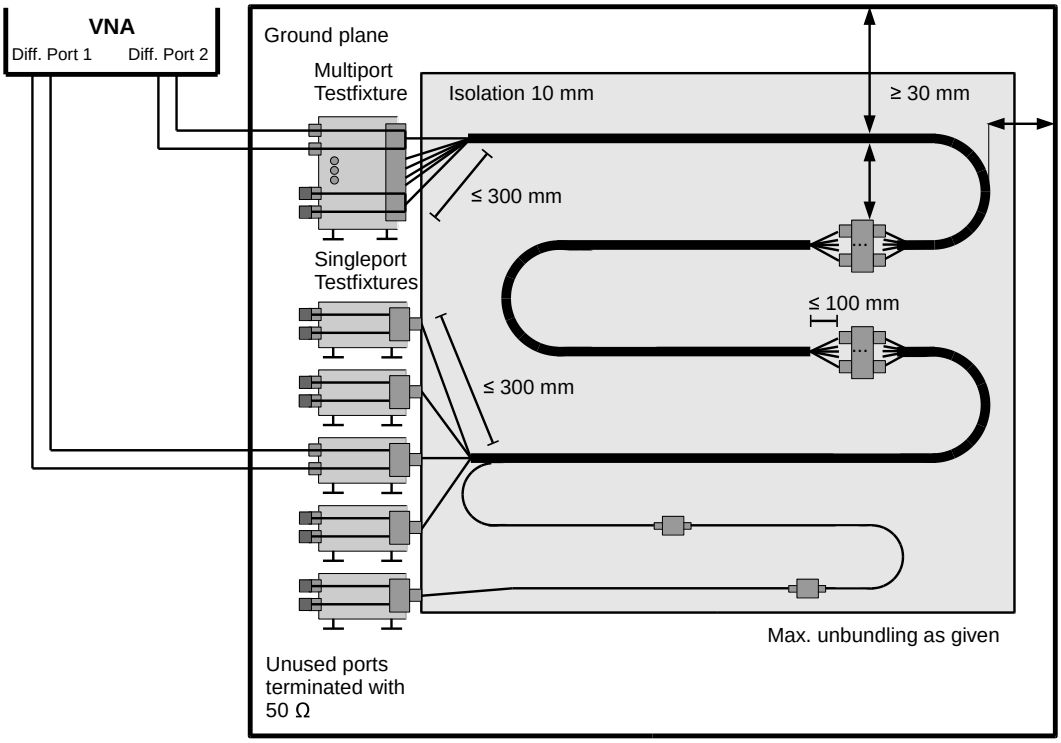

Figure A.5-4: Reference wiring harness far end crosstalk measurement (AFEXT, AFEXTDC and THRU)

Figure A.5-4 shows port 2 of the VNA connected to the multiport measurement fixture and port 1 connected to the far end measurement fixture. This allows to measure alien far end crosstalk parameters AFEXT and AFEXTDC and well as the THRU connection.

The measurement shall be repeated for every pair of the multi-port measurement fixture. To calculate the power-sum crosstalk (PSANEXT and PSAACRF) for each port, the measurement results for all ports need to be summed. Equations how to calculate the power-sum crosstalk from individual transmission measurements are given in Chapter 3.

Annex B – Correction Method for TDR Measurements

For long channels the TDR measurement technique leads to incorrect measuring results. To prevent getting fault results the following correction procedure shall be used:

a) TDR measurement from both sides of the investigated channel using system rise time 500 ps
b) If the measured CIDM value increases with a linear slope over length for both particular measurements the correction given below is applicable, otherwise the correction is not allowed.
   I. Calculation of slope of measured CIDM function over time at the region of cable:
      $S(t, CIDM_{measured}(t))$
      Note: The impedance of measurement fixture and ECU connector must be out of focus for this calculation.
      Possible calculation method: EXCEL function “Slope” or comparable functions at other software tools
   II. Correct slope
      $CIDM1(t) = CIDM_{measured}(t) – S * t$
   III. Getting offset O at the beginning of channel ($t = t_{DUT0}$)
      $O = CIDM_{measured}(t_{DUT0}) - CIDM1(t_{DUT0})$
      Note: Needed to avoid correction of slope in measurement cables used for connection the TDR measuring equipment with the measurement fixture
   IV. Correct offset
      $CIDM_{corrected}(t) = CIDM1(t) + O$

The limit is valid for $CIDM_{corrected}(t)$. Both results for $CIDM_{measured}(t)$ and $CIDM_{corrected}(t)$ shall be given in the resulting diagram. An Example of correction results is given in Figure B-1.

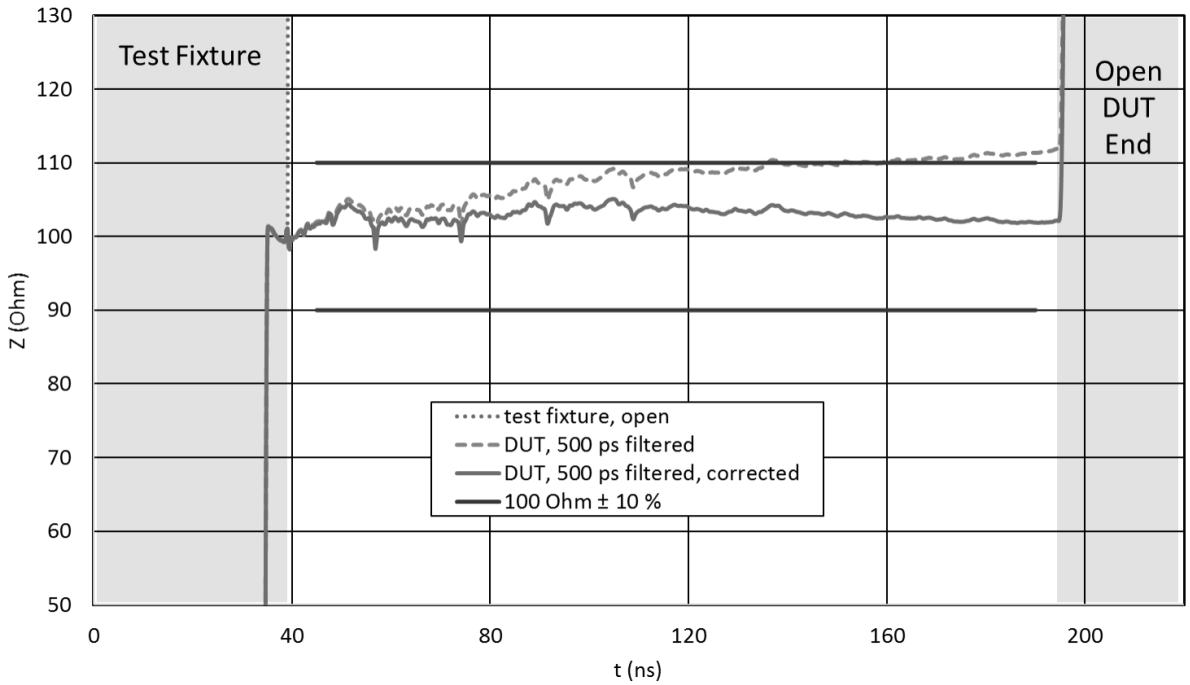

Figure B-1: Example for correction of TDR measurement results for long communication channels